MEC 249 – Biomechanics of Solids
Sheet 2
Direct Shear, Torsion

1. A load P is applied to a steel rod supported as shown by an aluminum plate into which a 12-mm-diameter hole has been drilled. Knowing that the shearing stress must not exceed 180 MPa in the steel rod and 70 MPa in the aluminum plate, determine the largest load P that can be applied to the rod.

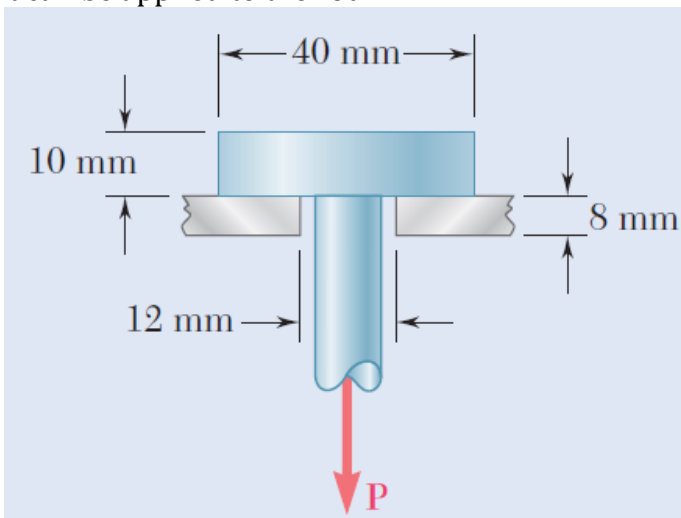

2. The hydraulic cylinder CF, which partially controls the position of rod DE, has been locked in the position shown. Member BD is 15 mm thick and is connected at C to the vertical rod by a 9-mm-diameter bolt. Knowing that P=2 kN and θ=75 ∘ , determine the average shearing stress in the bolt.

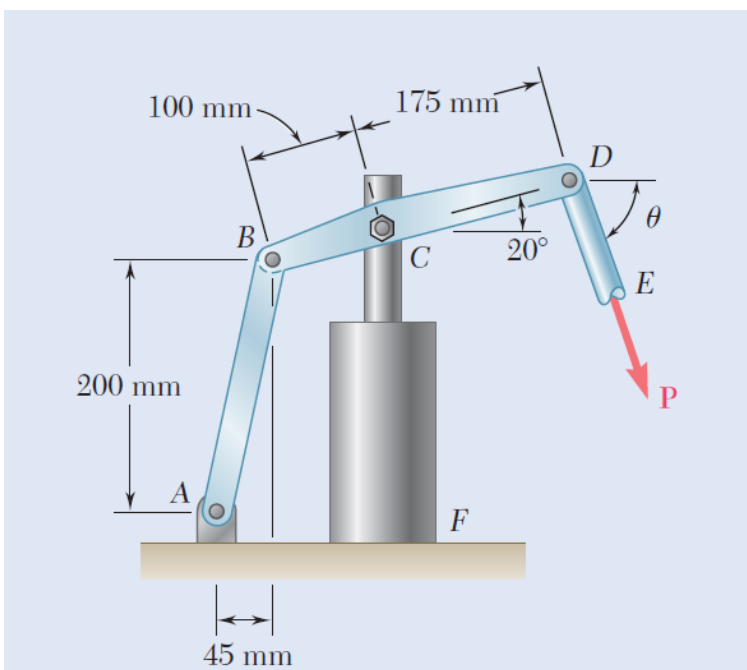

3. An angle bracket ABC is restrained by a high-strength steel wire CD, and it supports a load P at A, as shown in Fig. The strength properties of the wire and the shear pin at B are σ_y = 350 MPa (wire), and τ_y = 300 MPa (pin at B). If the wire and pin are to be sized to provide a factor of safety against yielding of the wire of 3.3 and a factor of safety against shear failure of the pin of 3.5, what are the required diameters of the wire (to the nearest mm) and the pin (to the nearest mm)?

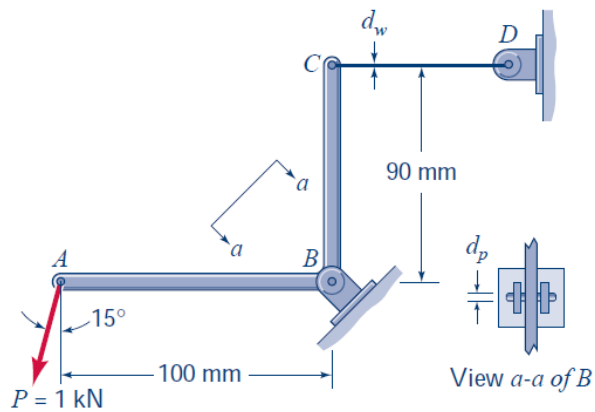

4. A shaft is required to deliver 500 kW of power at a rotational speed of 30 rev/sec.
(a) If the shaft is to be solid, and made of bronze with an allowable shear stress of τ_{allow} = 50 MPa, what is the required diameter of the shaft (to the nearest mm)?
(b) What is the weight of a 1-m length of the solid bronze shaft from Part (a)? The specific weight of the bronze is 80 kN/m3.
(c) Determine (to the nearest mm) the required outer diameter, do, of a tubular shaft made of the same bronze material if the tubular shaft is to have an inner diameter to outer diameter ratio of di /do = 0.6
(d) Compare the weight of a 1-m length of this tubular shaft with the weight of the 1-m length of solid shaft as determined in Part (b).

5. Shaft *BC* is hollow with inner and outer diameters of 90 mm and 120 mm, respectively. Shafts *AB* and *CD* are solid and of diameter *d*. For the loading shown, determine (*a*) the maximum and minimum shearing stress in shaft *BC*, (*b*) the required diameter *d* of shafts *AB* and *CD* if the allowable shearing stress in these shafts is 65 MPa.

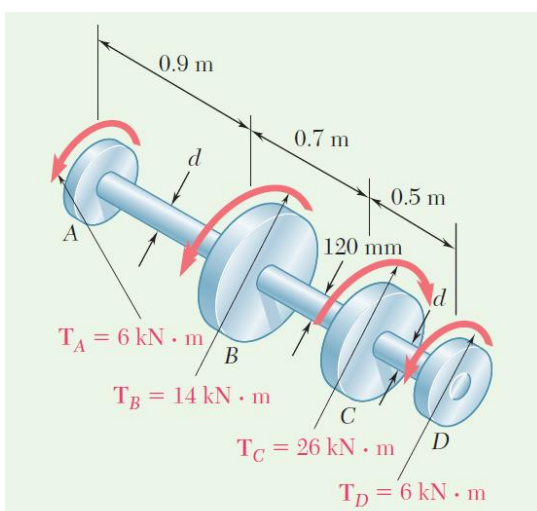

6. Determine the torque that can be applied to a solid shaft of 20-mm diameter without exceeding an allowable shearing stress of 80 MPa. Solve the same problem again if the solid shaft is replaced by a hollow shaft of the same cross-sectional area and with an inner diameter equal to half of its own outer diameter.

7. The solid spindle *AB* is made of a steel with an allowable shearing stress of 12 ksi, and sleeve *CD* is made of a brass with an allowable shearing stress of 7 ksi. Determine (*a*) the largest torque **T** that can be applied at *A* if the allowable shearing stress is not to be exceeded in sleeve *CD*, (*b*) the corresponding required value of the diameter *ds* of spindle *AB*.

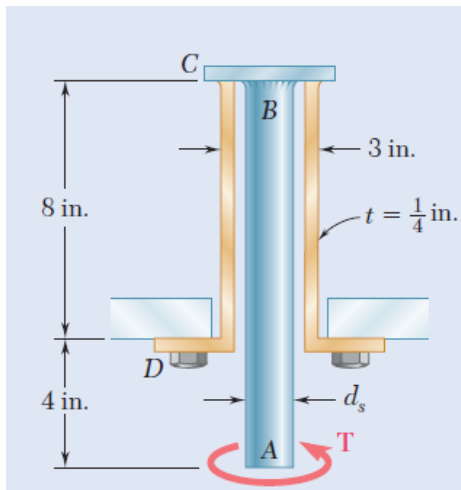

8. For the same solid spindle in problem 7, if the solid spindle *AB* has a diameter *ds* = 1.5 in. and is made of a steel with an allowable shearing stress of 12 ksi, while sleeve *CD* is made of a brass with an allowable shearing stress of 7 ksi. Determine the largest torque **T** that can be applied at *A*.

9. Under normal operating conditions, the electric motor exerts a torque of 2.4 kN.m on shaft *AB*. Knowing that each shaft is solid, determine the maximum shearing stress in (*a*) shaft *AB*, (*b*) shaft *BC*, (*c*) shaft *CD*.

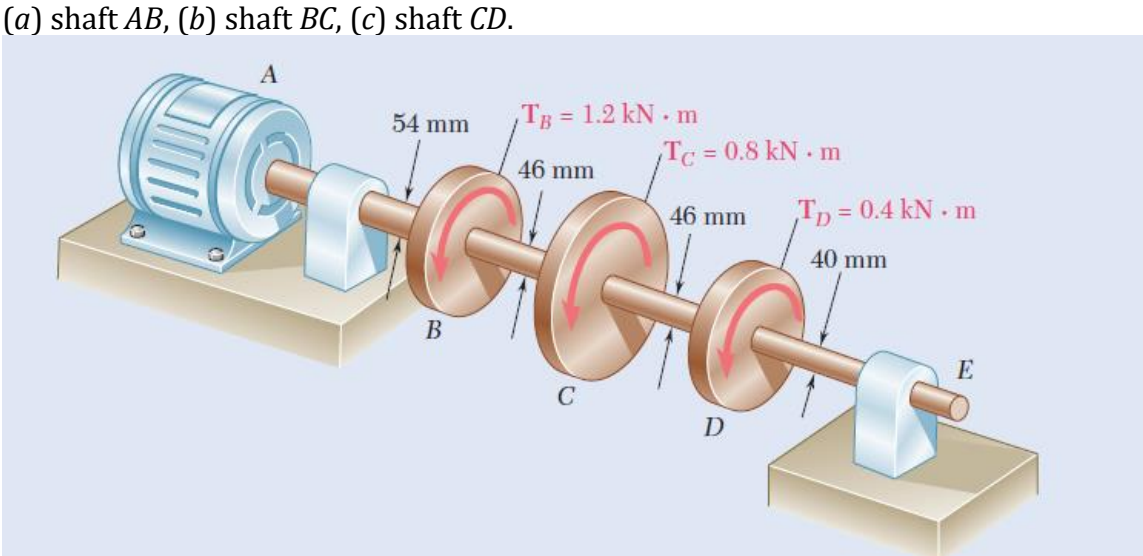

10. In order to reduce the total mass of the assembly of Prob. 9, new design is being considered in which the diameter of shaft *BC* will be smaller. Determine the smallest diameter of shaft *BC* for which the maximum value of the shearing stress in the assembly will not be increased.

11. Under normal operating conditions a motor exerts a torque of magnitude $T_F = 150$ *N.m* at *F*. The shafts are made of a steel for which the allowable shearing stress is 75 MPa. Knowing for the gears r_D = 200 mm and r_G = 75 mm, determine the required diameters of a) Shaft CDE b) Shaft FGH

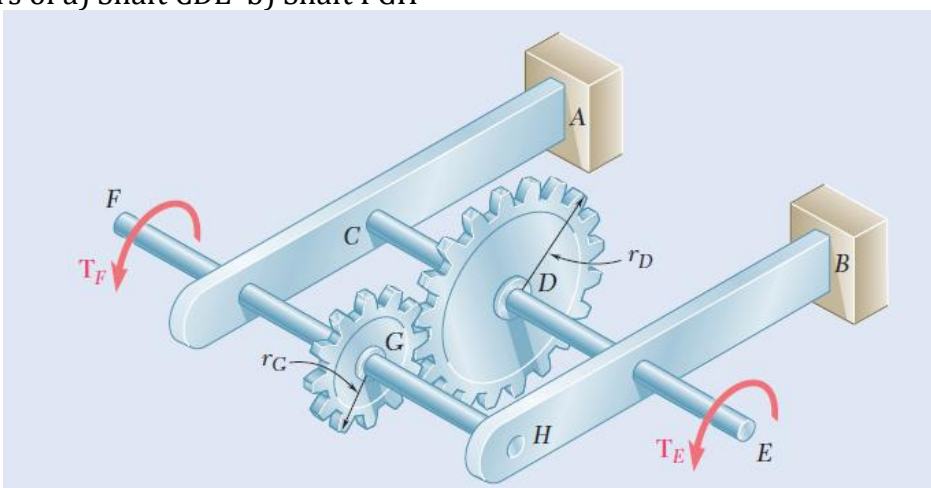

12. For Problem 11, Under normal operating conditions a motor exerts a torque of magnitude T_F at *F*. The shafts are made of a steel for which the allowable shearing stress is 85 MPa and have diameters d_{CDE} = 22 mm. and d_{FGH} = 20 mm. Knowing that r_D = 150 mm. and r_G = 100 mm, determine the largest allowable value of T_F .

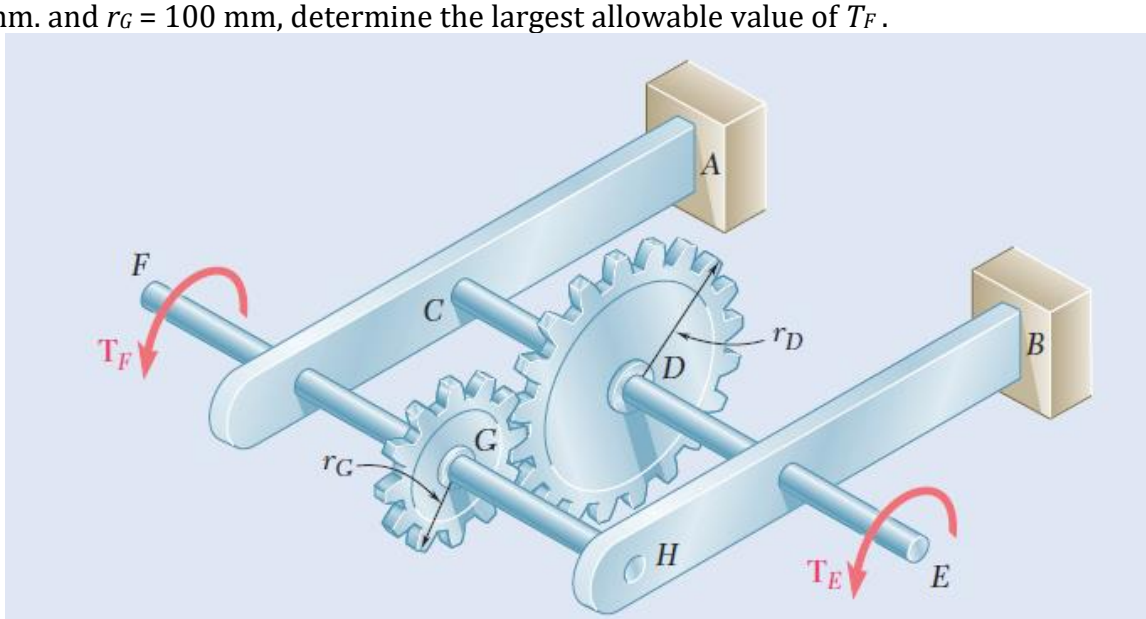

13. (*a*) For the aluminum pipe shown (G = 27 GPa), determine the torque $\mathbf{T}_0$ causing an angle of twist of 2 ∘ . (*b*) Determine the angle of twist if the same torque $\mathbf{T}_0$ is applied to a solid cylindrical shaft of the same length and cross-sectional area.

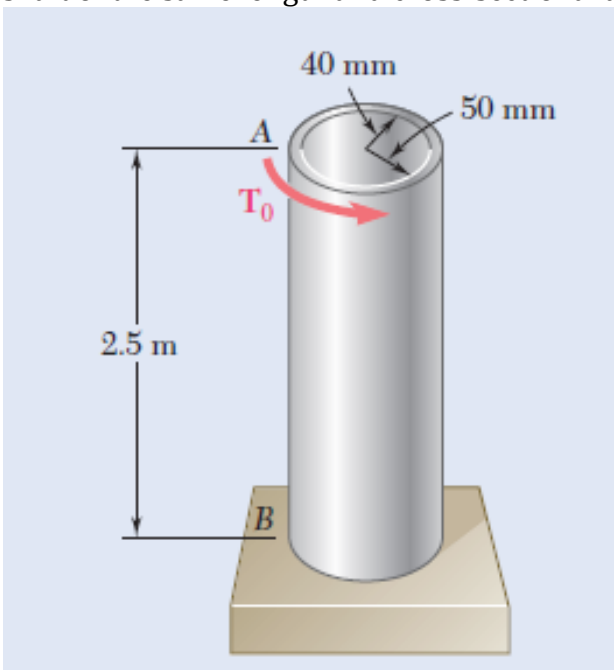

14. The electric motor exerts a 500 N.m-torque on the aluminum shaft ABCD when it is rotating at a constant speed. Knowing that G=27 GPa and that the torques exerted on pulleys B and C are as shown, determine the angle of twist between (a) B and C, (b) B and D.

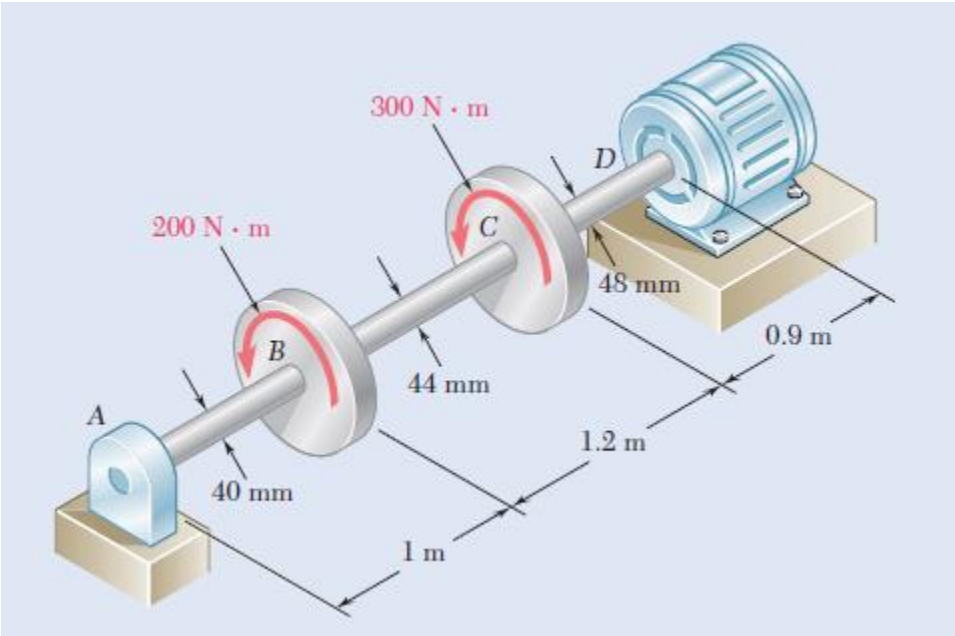

15. The aluminum rod AB (G=27 GPa) is bonded to the brass rod BD (G=39 GPa). Knowing that portion CD of the brass rod is hollow and has an inner diameter of 40 mm, determine the angle of twist at A.

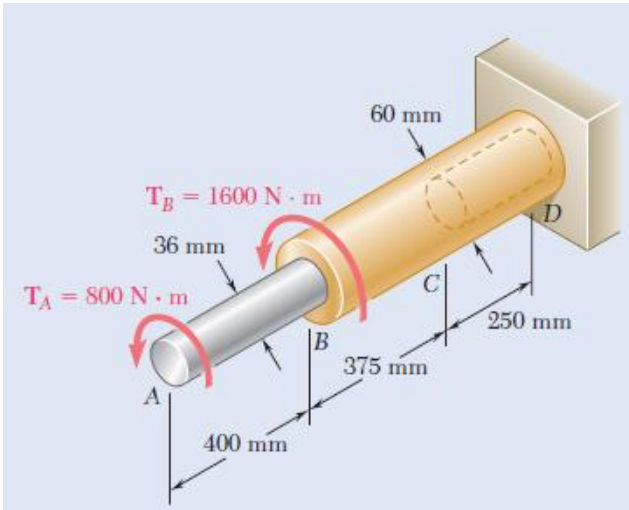

16. The design specifications of a 1.2-m-long solid circular transmission shaft require that the angle of twist of the shaft not exceed 4∘ when a torque of 750 N.m is applied. Determine the required diameter of the shaft, knowing that the shaft is made of a steel with an allowable shearing stress of 90 MPa and a modulus of rigidity of 77.2 GPa.