Arab Academy for Science and Technology

Faculty of **Engineering** | **Mechanical Engineering**

March 2018 | **Stress Analysis**

Time Allowed: 1 hour

Answer the following two questions at the same paper:

QUESTION ONE (10 points):

The L-shaped loading frame in Fig. 1 is supported by a high-strength shear pin at C and by a tie-rod AB. Both the tie-rod and the pin are to be sized with a factor of safety of 3.0. The strength properties of the rod and pin are: σ_y=0.34 GPa and τ_y = 0.34 GPa; the respective lengths are: L_1 = 1.5 m and L_2 = L_3 = 2.0 m.

(a) If the loading platform is to be able to handle loads W up to W = 8 kN, what is the required diameter, d_r, of the tie-rod?

(b) What is the required diameter, d_p, of the pin at C?

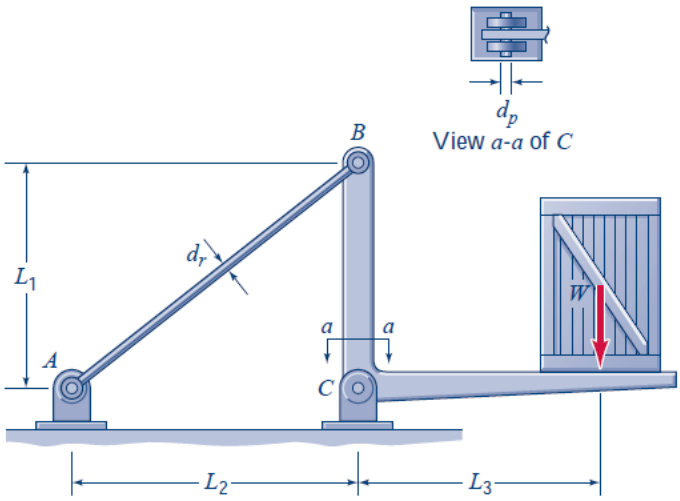

Figure 1.

QUESTION TWO (10 points):

The solid steel shaft AD in Fig. 2 delivers 5.5 kW of power to the gear at B and 4.0 kW of power to the gear at D. The shaft has a diameter of 7/8 in., is supported by a frictionless bearing at C, and rotates at an angular speed of 1725 rpm. Determine the maximum shear stress (τ_{max}), in the shaft between the motor at A and the gear at B, and the maximum shear stress (τ_{max}) in the shaft BD between the two drive gears. (1 in. = 2.54 cm).

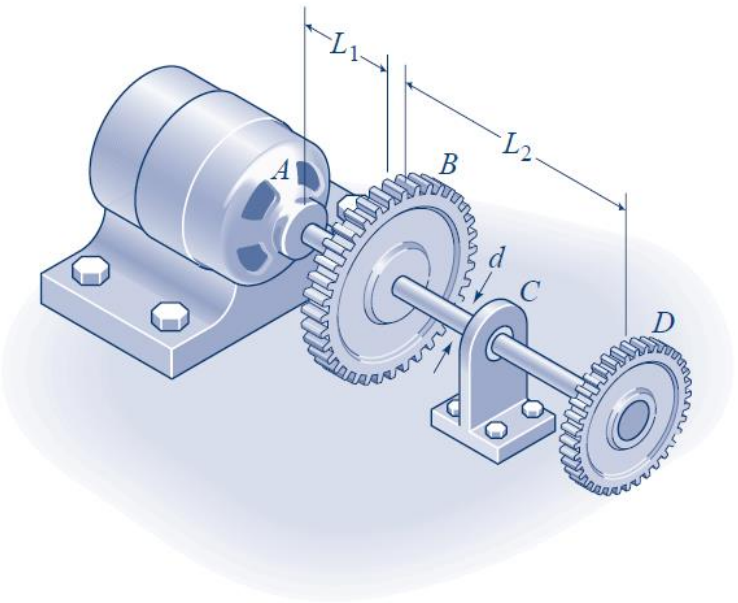

Figure 2.