CHAPTER 3

Free Vibration of Single-Degree- of- Freedom Systems

Systems are said to undergo free vibration when they oscillate about their static equilibrium position when displaced from those positions and then released. The frequencies at which they vibrate, known as natural frequencies, depend primarily upon the mass and elasticity (stiffness) of the systems.

Free vibration of an undamped system:

Equation of motion

a- Using Newton's second law of motion:

1- Select a suitable coordinate to describe the position of the mass or the rigid body in the system, (Linear coordinate for linear motion-Angular coordinate for angular motion),
2- Determine the static equilibrium configuration of the system and measure the displacement from it,
3- Draw the free-body diagram of the mass or rigid body, indicate all the active and reactive forces acting on the system,
4- Apply Newton's second law of motion to the mass or rigid body shown by the free-body Diagram. *"The rate of change of momentum of a mass is equal to the forces acting on it"*

Example 1: Mass-spring system

i- .

m ≡ mass in Kg

k ≡ spring stiffness N/m (weightless spring)

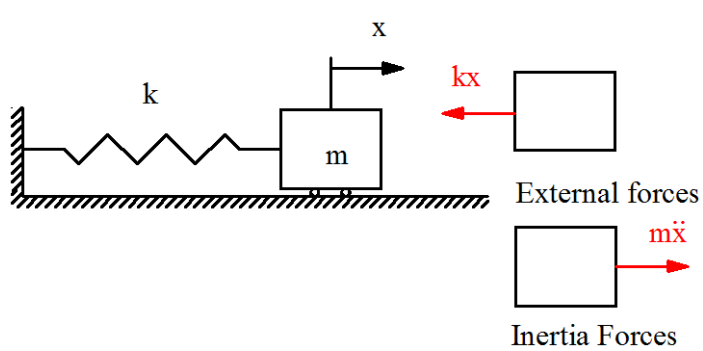

$$m\ddot{x} = -kx$$

$$m\ddot{x} + kx = 0$$

$$\ddot{x} + \frac{k}{m}x = 0$$

$$\ddot{x} + \omega_n{}^2 x = 0 \;\; S.H.M$$

$$\omega_n = \sqrt{\frac{k}{m}} \;\; \frac{rad}{s}$$

$\omega_n \equiv$ natural frequency (circular)

$f = \frac{\omega_n}{2\pi}$(cps) Hz

$$period\ \tau = \frac{2\pi}{\omega_n} = \frac{1}{f} \quad sec.$$

ii- $\delta \equiv \; static\ deflection$

From equilibrium position

$k\delta = mg$

$m\ddot{x} = -k(x + \delta) + mg$

$m\ddot{x} + kx = 0$

$\ddot{x} + \frac{k}{m}x = 0$

$\ddot{x} + \omega_n{}^2 x = 0 \;\; S.H.M$

$\omega_n = \sqrt{\frac{k}{m}} \;\; \frac{rad}{s}$

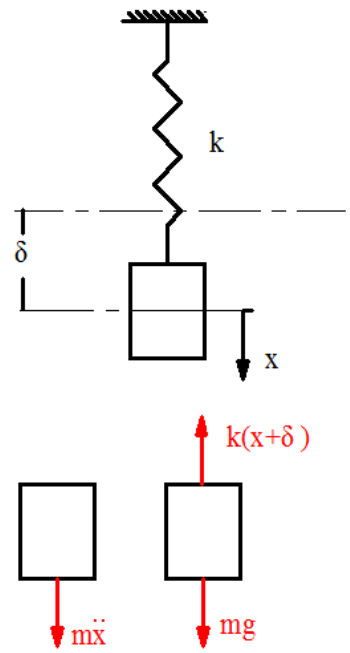

b- Using Principle of Conservation of Energy:

T≡ the kinetic energy is stored in the mass by virtue of its velocity,

U≡ the potential energy is stored in the spring by virtue of its elastic deformation.

Conservative system: at which no energy is lost due to friction or energy dissipating non-elastic members.

The principle of conservation of energy can be expressed as:

T + U = constant

Or $\frac{d}{dt}(T + U) = 0$

In example **1-i**

$$T = \frac{1}{2}\, m\dot{x}^2$$

$$U = \frac{1}{2} k x^2$$

$$\frac{d}{dt}\left(\frac{1}{2}\, m\dot{x}^2 + \frac{1}{2} k x^2\right) = 0$$

$$m\ddot{x} + kx = 0$$

1-ii

$$T = \frac{1}{2}\, m\dot{x}^2$$

$$U = \frac{1}{2} k (x+\delta)^2 - mg\, x$$

$$\frac{d}{dt}\left(\frac{1}{2}\, m\dot{x}^2 + \frac{1}{2} k (x+\delta)^2 - mg\, x\right) = 0$$

$$m\dot{x}\ddot{x} + k(x+\delta)\dot{x} - mg\dot{x} = 0$$

$$k\delta = mg$$

$$m\ddot{x} + kx = 0$$

Example 2: Torsional System

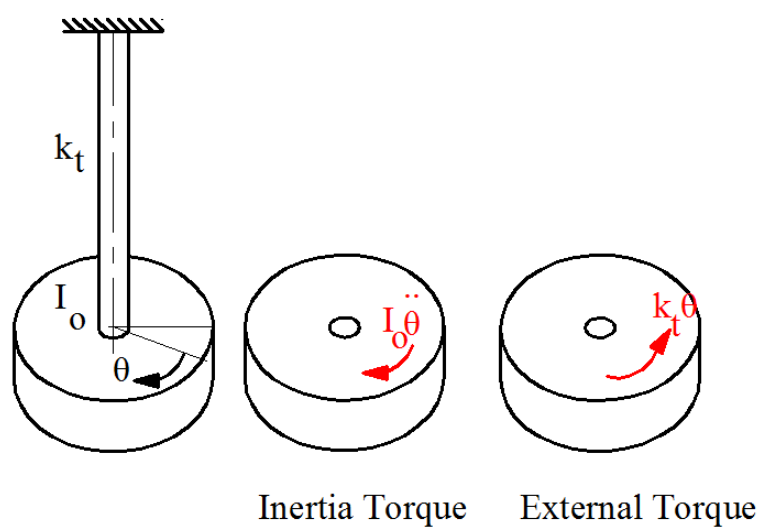

$$k_t = \frac{GJ_o}{l} = \frac{\pi G d^4}{32\, l} \quad \frac{N.m}{rad} \qquad stiffness\ of\ the\ shaft$$

$$I_o\ddot{\theta} = -k_t\theta$$
$$I_o = mass\ moment\ of\ inertia\ Kg.m^2$$
$$\omega_n = \sqrt{\frac{k_t}{I_o}}\ \frac{rad}{s}$$

Energy method

$$T = \frac{1}{2}\ I_0\dot{\theta}^2$$
$$U = \frac{1}{2}k_t\theta^2$$
$$\frac{d}{dt}\left(\frac{1}{2}\ I_0\dot{\theta}^2\ + \frac{1}{2}k_t\theta^2\right) = 0$$
$$I_o\ddot{\theta} = -k_t\theta$$

Example 3: Simple Pendulum

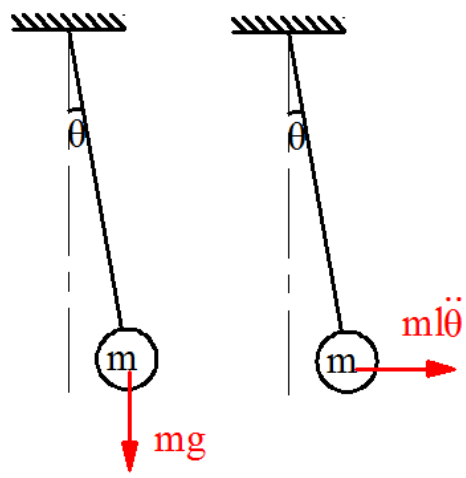

Moment about o

$$ml\ddot{\theta}.l = -mg.l\sin\theta$$

$$l\ddot{\theta} = -g\sin\theta$$

$$for\ small\ oscilation\ \sin\theta \cong \tan\theta \cong \theta\ rad.$$

$$\cos\theta \cong 1$$

$$\ddot{\theta} = -\frac{l}{g}\theta \qquad S.H.M$$
$$\omega_n = \sqrt{\frac{g}{l}}\ \frac{rad}{s}$$

Energy method

$$T = \frac{1}{2}ml^2\dot{\theta}^2$$

$$U = mgl(1 - \cos\theta)$$

$$\frac{d}{dt}\left(\frac{1}{2}ml^2\dot{\theta}^2 + mgl(1 - \cos\theta)\right) = 0$$

$$\frac{1}{2}ml^2 2\dot{\theta}\ddot{\theta} + mgl\sin\theta\,\dot{\theta} = 0$$

$$\dot{\theta} \neq 0 \quad \sin\theta \approx \theta$$

$$l\ddot{\theta} + g\theta = 0$$

$$\ddot{\theta} + \frac{g}{l}\theta = 0$$

$$\omega_n = \sqrt{\frac{g}{l}}$$

Solution of Equation of Motion:

The general solution of $\ddot{x} + \omega_n{}^2 x = 0$

Let $x = e^{st}$, $\ddot{x} = s^2 e^{st}$

$s^2 e^{st} + \omega_n{}^2 e^{st} = 0$

$(s^2 + \omega_n{}^2)e^{st} = 0 \quad e^{st} \neq 0$

$s = \pm i\omega_n$

$General\ solution$:

$x = a_1 e^{i\omega_n t} + a_2 e^{-i\omega_n t}$

$x = A\cos\omega_n t + B\sin\omega_n t$

$\quad = C\cos(\omega_n t - \varphi)$

$\dot{x} = -A\omega_n \sin\omega_n t + B\omega_n \cos\omega_n t$

Initial condition:

1) $t = 0 \quad x = x_o \quad \dot{x} = 0$

   $A = x_o, \quad B = 0$

   $x = x_o \cos\omega_n t$

2) $t = 0 \quad x = 0 \quad \dot{x} = v_o$

$$A = 0, \quad B = \frac{v_o}{\omega_n}$$

$$x = \frac{v_o}{\omega_n} \sin \omega_n t$$

3) $t = 0 \qquad x = x_o \qquad \dot{x} = v_o$

$$A = x_o, \quad B = \frac{v_o}{\omega_n}$$

$$x = x_o \cos \omega_n t + \frac{v_o}{\omega_n} \sin \omega_n t$$

Rayleigh's Energy Method:

To find the natural frequencies of single degree of freedom systems

$$T_{max} = U_{max}$$

$$x = A \cos \omega_n t \qquad x_{max} = A$$

$$\dot{x} = -A\omega_n \sin \omega_n t \qquad \dot{x}_{max} = A\omega_n$$

$$T_{max} = \frac{1}{2} m (A\omega_n)^2$$

$$U_{max} = \frac{1}{2} k A^2$$

$$\frac{1}{2} m (A\omega_n)^2 = \frac{1}{2} k A^2$$

$$\omega_n = \sqrt{\frac{k}{m}}$$

Heavy Springs:

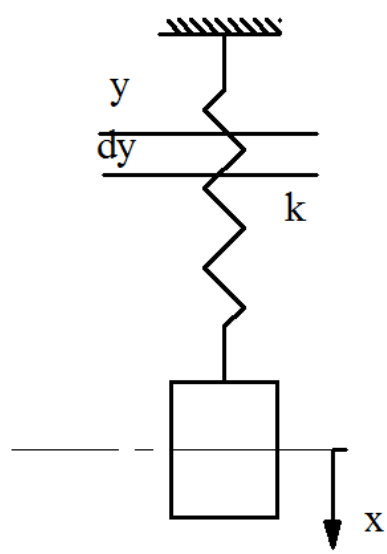

$$m_s \equiv spring\ mass$$

$$\gamma = \frac{m_s}{l}$$

$$dT_s = \frac{1}{2} \gamma\, dy\, \dot{y}^2$$

$$\frac{\dot{x}}{\dot{y}} = \frac{l}{y} \qquad \dot{y} = \frac{y}{l} \dot{x}$$

$$dT_s = \frac{1}{2} \gamma\, dy . \frac{y^2}{l^2} \dot{x}^2$$

$$T_s = \int_0^l dT_s$$

$$= \frac{1}{2}\frac{\gamma}{l^2}\ \dot{x}^2 \int_0^l y^2 dy$$

$$= \frac{1}{6}\gamma l \dot{x}^2$$

$$= \frac{1}{6} m_s \dot{x}^2$$

$$T = \frac{1}{2}\ m\dot{x}^2 + \frac{1}{6} m_s \dot{x}^2$$

$$U = \frac{1}{2} k x^2$$

$$\frac{d}{dt}(T + U) = 0$$

$$\frac{d}{dt}\left(\frac{1}{2}\ m\dot{x}^2 + \frac{1}{6} m_s \dot{x}^2 + \frac{1}{2} k x^2\right) = 0$$

$$\left(m + \frac{m_s}{3}\right)\dot{x}\ddot{x} + \ kx\dot{x} = 0$$

$$\left(m + \frac{m_s}{3}\right)\ddot{x} + \ kx = 0$$

$$\omega_n = \sqrt{\frac{k}{m + \frac{m_s}{3}}}$$

- The response of single degree can be represented in the displacement (x)-velocity($\dot{x}$) plane known as the state space or phase plane.

$$x = A\cos(\omega_n t - \varphi)$$

$$\cos(\omega_n t - \varphi) = \frac{x}{A}$$

$$\sin(\omega_n t - \varphi) = -\frac{\dot{x}}{A\omega_n} = -\frac{y}{A} \qquad \left(y = \frac{\dot{x}}{\omega_n}\right)$$

$$\frac{x^2}{A^2} + \frac{y^2}{A^2} = 1$$

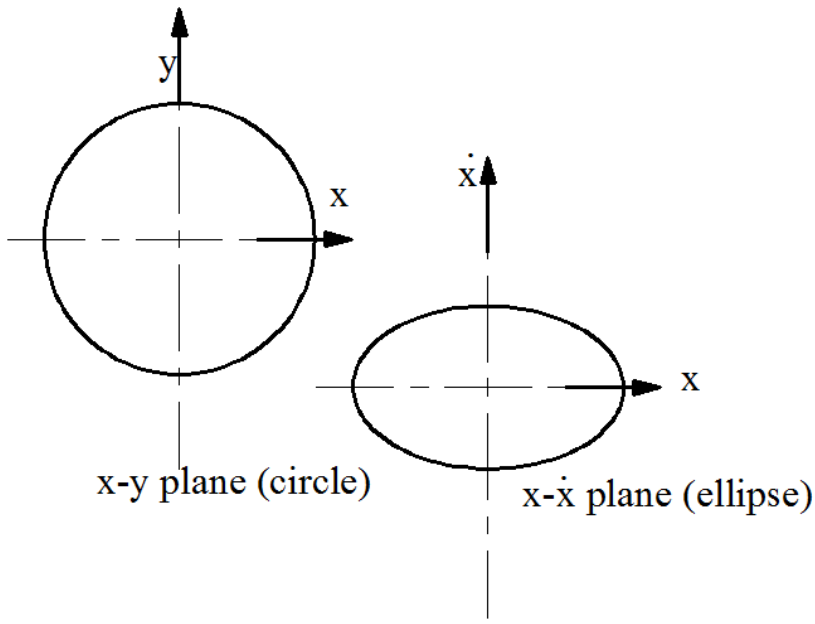

Stability Conditions

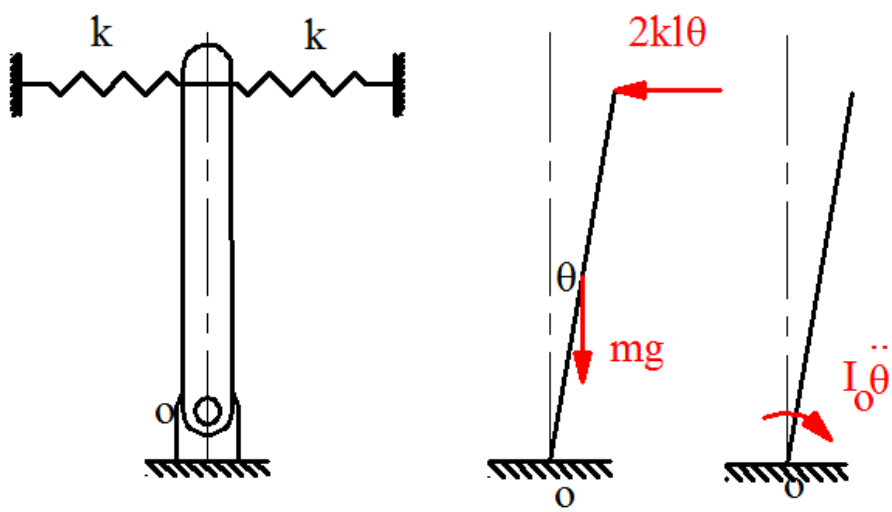

$$I_o\ddot{\theta} = -2kl\theta.l + mg\frac{l}{2}\theta$$

$$I_o = \frac{ml^2}{3}$$

$$\ddot{\theta} + \left(\frac{12.kl^2 - 3mgl}{2ml^2}\right)\theta = 0$$

The solution of the last equation depends on the sign of $\left(\frac{12.kl^2-3mgl}{2ml^2}\right) = {\omega_n}^2$

<u>Case 1:</u>

When $\left(\frac{12.kl^2-3mgl}{2ml^2}\right) > 0$ the solution represents stable oscillations and can be expressed as:

$$\theta = A\cos\omega_n t + B\sin\omega_n t$$

<u>Case 2:</u>

When $\left(\frac{12.kl^2-3mgl}{2ml^2}\right) = 0$

$\ddot{\theta} = 0$

$\theta = C_1 t + C_2$

For initial conditions $t = 0$ $\theta = \theta_o$ $\dot{\theta} = \dot{\theta}_o$,

the angular displacement increases linearly at a constant velocity $\dot{\theta}_o$.

If $\dot{\theta}_o = 0$ $\therefore$ $\theta \equiv$ denotes a static equilibrium position, the pendulum remains in its original position defined by $\theta = \theta_o$

<u>Case 3:</u>

When $\left(\frac{12.kl^2-3mgl}{2ml^2}\right) < 0 = \alpha^2$

$$\theta = B_1 e^{\alpha t} + B_2 e^{-\alpha t}$$

For initial conditions $t = 0$ $\theta = \theta_o$ $\dot{\theta} = \dot{\theta}_o$,

$$\theta = \frac{1}{2\alpha}[(\alpha\theta_o + \dot{\theta}_o)e^{\alpha t} + (\alpha\theta_o - \dot{\theta}_o)e^{-\alpha t}]$$

i.e. θ increases exponentially with time, the motion is unstable. The physical reason for this is that the restoring moment due to the spring ($2kl^2$ θ), which tries to bring the system to equilibrium position, is less than the non-restoring moment due to gravity ($mg\frac{l}{2}\theta$), which tries to move the system away from equilibrium position.

Free Vibration with Viscous Damping:

Equation of Motion:

The viscous damping force $F_d = -c\dot{x}$

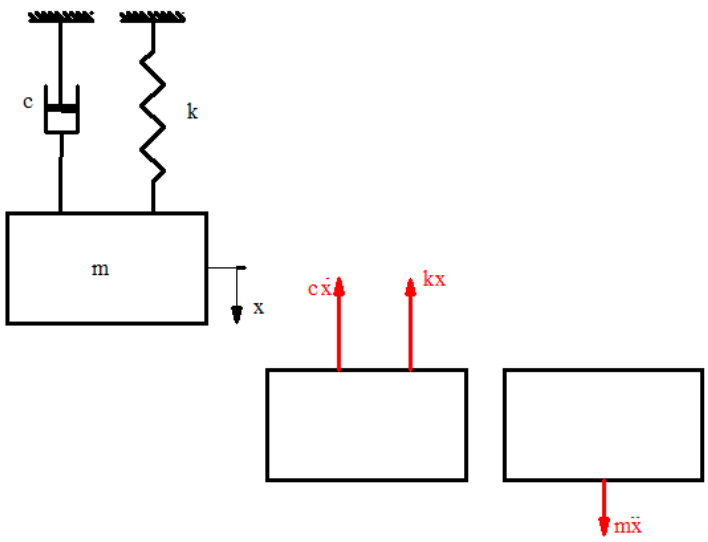

$c \equiv damping\ coefficient\ \ or\ \ damping\ constant\ (\frac{N.s}{m})$

-ve sign (the force is opposite to the direction of velocity)

$$m\ddot{x} = -c\dot{x} - kx$$
$$m\ddot{x} + c\dot{x} + kx = 0$$

Solution of Equation of Motion:

Let $x = e^{st}$, $\dot{x} = s.e^{st}$ $\ddot{x} = s^2.e^{st}$

$$ms^2 + cs + k = 0$$

$$s_{1,2} = \frac{-c \pm \sqrt{c^2 - 4mk}}{2m} = -\frac{c}{2m} \pm \sqrt{\left(\frac{c}{2m}\right)^2 - \frac{k}{m}}$$

$$x = A_1 e^{s_1 t} + A_2 e^{s_2 t}$$

A_1 and A_2 are arbitrary constants to be determined from the initial conditions of the system.

- **Critical damping coefficient** c_c is defined as the value of the damping constant c for which the radical in equation $s_{1,2}$ becomes zero,

$$\left(\frac{c_c}{2m}\right)^2 - \frac{k}{m} = 0$$

$$or\ c_c = 2m\sqrt{\frac{k}{m}} = 2\sqrt{km} = 2m\omega_n$$

- **The damping factor** or damping ratio ζ

$$\zeta = \frac{c}{c_c}$$

$$s_{1,2} = \left[-\zeta \pm \sqrt{\zeta^2 - 1}\right]\omega_n$$

$$x = A_1 e^{\left[-\zeta - \sqrt{\zeta^2-1}\right]\omega_n t} + A_2 e^{\left[-\zeta + \sqrt{\zeta^2-1}\right]\omega_n t}$$

- **<u>Case 1.</u> Over damped system:** ($c > c_c$ or $\zeta > 1$)

In this case, both roots are real. The motion is described by

$$x = e^{-\zeta\omega_n t}[A_1 e^{(-\omega_n\sqrt{\zeta^2-1}.t} + A_2 e^{(\omega_n\sqrt{\zeta^2-1}.t}]$$

The values of "A_1" and "A_2" are determined from the initial conditions which are

At $t = 0$, $x = x_o$ $\dot{x} = v_o$

$$A_1 = \frac{-x_o\left[\zeta - \sqrt{\zeta^2 - 1}\right]\omega_n - v_o}{2\omega_n\sqrt{\zeta^2 - 1}}, \qquad A_1 = \frac{x_o\left[\zeta + \sqrt{\zeta^2 - 1}\right]\omega_n + v_o}{2\omega_n\sqrt{\zeta^2 - 1}}$$

A plot of "x" with time is shown in Figure.

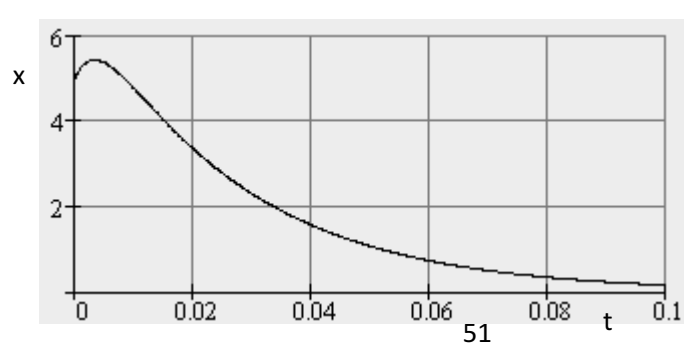

No vibration The mass moves slowly back to the equilibrium position rather than vibrating about it.

- **Case 2. Critically damped system:** ($c = c_c$ or $\zeta = 1$)

Both roots are real and are equal to "- ω".

The general solution is in the form

$$x = (A_1 + A_2 t)e^{-\omega_n t}$$

Applying the initial conditions (at t=0 $x=x_o$ $\dot{x} = v_o$), then

$$A_1 = x_o$$

$$A_2 = v_o + \omega\, x_o$$

$$x = [x_o + (v_o + \omega_n x_o)t]e^{-\omega_n t}$$

A plot of "x" with time is shown in Figure.

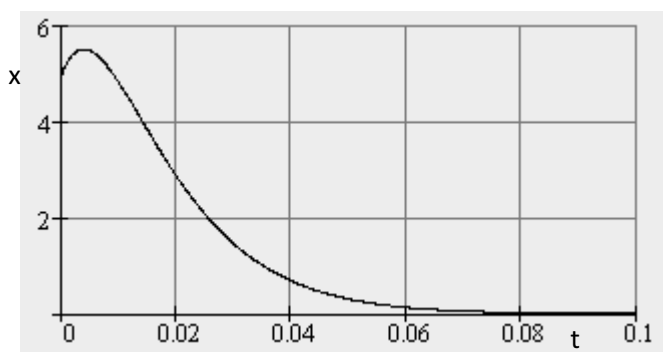

There is no vibration in this case,

A critically damped system will have the smallest damping required for aperiodic (non-periodic) motion, hence the mass returns to the position of rest in the shortest possible time without overshooting.

For example: large guns have dashpots with critical damping value, so that they return to their original position after recoil in the minimum time without vibrating. If the damping provided were more than the critical value, some delay would be caused before the next firing.

- **<u>Case 3.</u> Under damped system:** ($c < c_c$ or $\zeta < 1$)

In this case, both roots are complex and are given by

$$s_{1,2} = \left[-\zeta \pm i\sqrt{1-\zeta^2}\right]\omega_n$$

$$x = e^{-\zeta\omega_n t}[A_1 e^{(-\omega_n i\sqrt{1-\zeta^2}.t} + A_2 e^{(\omega_n i\sqrt{1-\zeta^2}.t}]$$

$$x = e^{-\zeta\omega_n t}[A_1{}' \cos\sqrt{1-\zeta^2}\omega_n t + A_2{}' \sin\sqrt{1-\zeta^2}\omega_n t]$$

Let $\sqrt{1-\zeta^2}\omega_n = \omega_d$ $\quad$ $(the\ frequency\ of\ the\ damped\ vibration)$

$$x = e^{-\zeta\omega_n t}[A_1{}' \cos\omega_d t + A_2{}' \sin\omega_d t]$$

The initial conditions which are at $t = 0$, $x = x_o$ $\dot{x} = v_o$

$$x = e^{-\zeta\omega_n t}[x_o \cos\omega_d t + \frac{v_o + \zeta\omega_n x_o}{\omega_d}\sin\omega_d t]$$

According to this equation, the motion is harmonic with frequency "ω_d". A plot for "x" with time is shown in Figure.

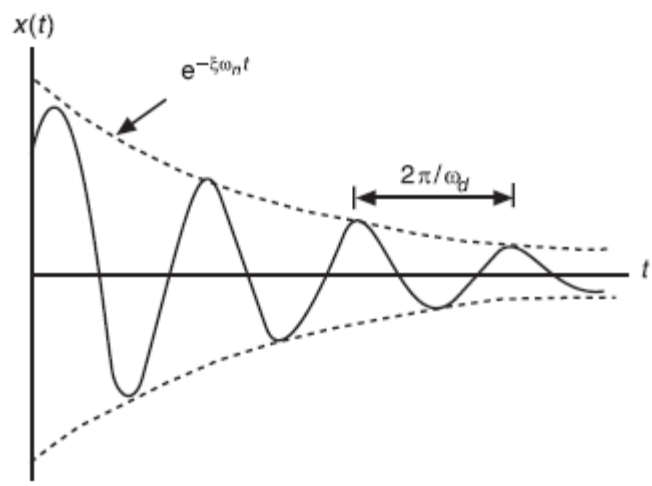

The last equation can be written as

$$x = Ae^{-\zeta\omega_n t}\sin(\omega_d t + \varphi)$$

This equation is represented by a vector which rotates with an angular velocity "ω_d" and makes an angle "$\omega_d t + \varphi$" with the horizontal axis. The length of the vector decreases with time. The tip of the vector traces a spiral as shown in Figure.

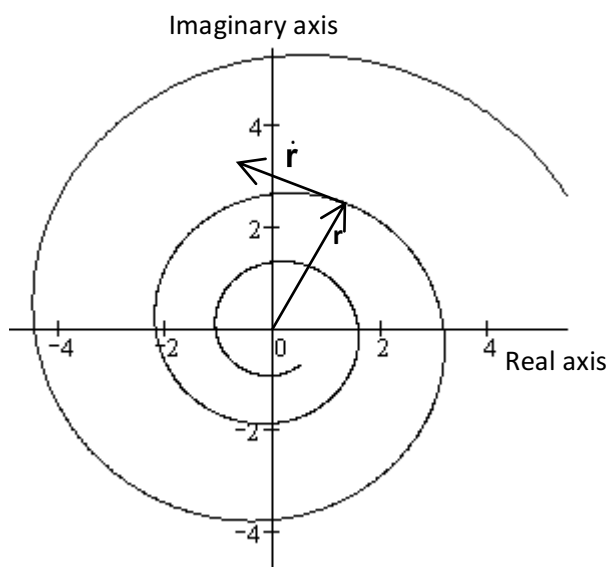

The Logarithmic Decrement

To estimate the amount of damping of a system is to measure the displacement at some time "t" (given by "x_1"), then measure it again after one complete cycle (given by x_2), that is, after a period of " $\tau_d = \frac{2\pi}{\omega_d}$". "$x_1$" and "$x_2$", are given by

$$x_1 = Ae^{-\zeta\omega_n t}\sin(\omega_d t + \varphi)$$

$$x_2 = Ae^{-\zeta\omega_n (t+\tau_d)}\sin[\omega_d (t + \tau_d) + \varphi]$$

It is clear that "$\sin(\omega_d t + \varphi) = \sin[\omega_d (t + \tau_d) + \varphi]$". Dividing both equations, then

$$\frac{x_1}{x_2} = \frac{e^{-\zeta\omega_n t}}{e^{-\zeta\omega_n (t+\tau_d)}} = e^{\zeta\omega_n \tau_d}$$

The rate at which the amplitude of a free damped vibration decreases 'δ' (the logarithmic decrement) can be obtained from:

$$\delta = \ln \frac{x_1}{x_2} = \zeta\omega_n\tau_d = \zeta\omega_n \frac{2\pi}{\omega_d}$$

$$= \frac{2\pi\zeta}{\sqrt{1-\zeta^2}}$$

$$\delta = \frac{1}{n} ln \frac{x_1}{x_{n+1}}$$

For small damping, $\delta \approx 2\pi\zeta$

Energy dissipated in viscous damping:

The rate of change of energy

$$\frac{dw}{dt} = force * velocity = Fv = -cv^2 = -c(\frac{dx}{dt})^2$$

The negative sign, the energy dissipates with time

Assume $x = X \sin \omega_d t$ (steady-state response under forced vibration)

$$\Delta W = \int_0^{\frac{2\pi}{\omega_d}} c(\frac{dx}{dt})^2 \, dt = \int_0^{2\pi} cX^2\omega_d \cos^2 \omega_d t \, d\omega_d t = \pi c\omega_d X^2$$

The fraction of energy of the vibrating system that is dissipated in each cycle,

$$\frac{\Delta W}{W} = \frac{\pi c\omega_d X^2}{\frac{1}{2} m{\omega_d}^2 X^2} = 2\,\delta = 4\pi\zeta = constant$$

$loss\ coefficient = \frac{\Delta W/_{2\pi}}{W} = \frac{\Delta W}{2\pi W}$ ratio of energy dissipated per radian.

Comparison between damping types

The following Figure shows plots of the three types of damping for the same initial conditions.

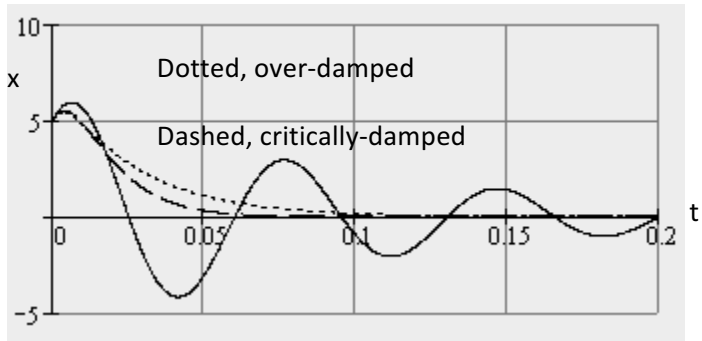

We notice that, for the over-damped system, the motion decays rather slowly without oscillations. The motion of critically damped systems is called "aperiodic", or non periodic. The mass returns back to the equilibrium position without oscillation with the fastest rate. This type of damping is suitable for the recoil mechanism of guns. The gun barrel is required to return back after firing as fast as possible without oscillation. The case of under damping is used for applications which need to reduce vibrations.

Torsional System with Viscous Damping:

The damping torque: $T_d = -c_t\dot{\theta}$

$$I_o\ddot{\theta} + c_t\dot{\theta} + k_t\theta = 0$$

$$\omega_d = \omega_n\sqrt{1-\zeta^2}$$

$$\omega_n = \sqrt{\frac{k_t}{I_o}}$$

$$and\ \zeta = \frac{c_t}{c_{t_c}} = \frac{c_t}{2I_o\omega_n} = \frac{c_t}{2\sqrt{k_tI_0}}$$

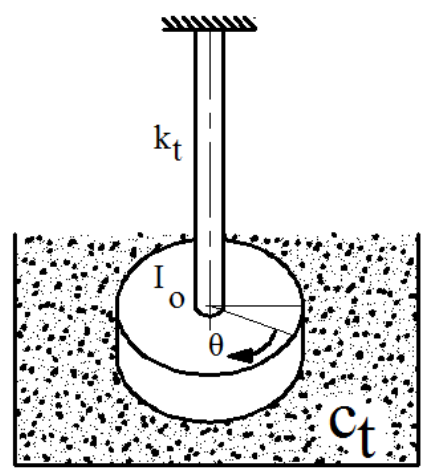

Example: Analysis of Cannon

When the gun is fired, high-pressure gasses accelerate the projectile inside the barrel to a very high velocity. The reaction force pushes the gun barrel in the opposite direction of the projectile. Since it is desirable to bring the gun barrel to rest in the shortest time without oscillation, it is made to translate backward against a critically damped spring-damper system called the recoil mechanism.

In practical case, the gun barrel and the recoil mechanism have a mass of 500 Kg with a recoil spring of stiffness 10,000 N/m. The gun recoil 0.4 m upon firing. Find the critical damping coefficient, the initial velocity, and the time taken by the gun to return to 0.1 m from its initial position.

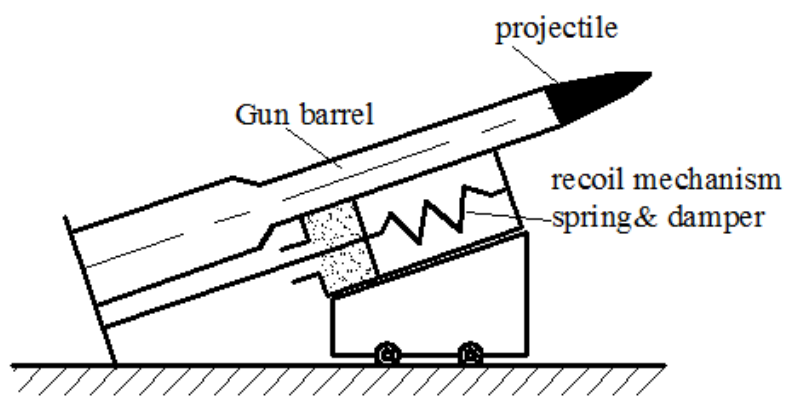

$$\omega_n = \sqrt{\frac{k}{m}} = 4.4721 \ \frac{rad}{s}$$

$$c_c = 2m\omega_n = 4472.1 \ N.s/m$$

$$x = (A_1 + A_2 t)e^{-\omega_n t}$$ for critical damping

$A_1 = x_o$

$A_2 = v_o + \omega \ x_o$

$$\dot{x} = -\omega_n(A_1 + A_2 t)e^{-\omega_n t} + A_2 e^{-\omega_n t}$$

For maximum x(t), $\dot{x} = 0$

$$t_1 = \left(\frac{1}{\omega_n} - \frac{A_1}{A_2}\right)$$

$$x_o = A_1 = 0 \qquad t_1 = \frac{1}{\omega_n}$$

$$x_{max} = 0.4 \ m$$

$$x_{max} = x(t = t_1) = (A_2 t_1)e^{-\omega_n t_1} = \frac{\dot{x}_o}{e\omega_n}$$

$$or\ \dot{x}_o = x_{max}\omega_n e = 4.8626\frac{m}{s}$$

$$0.1 = (A_2 t_2)e^{-\omega_n t_2} \quad t_2 = 0.8258\ sec.$$

Free Vibration with Coulomb Damping "Dry Friction Damping"

Coulomb damping results from the sliding of two dry rough surfaces. The damping force is equal to the product of the normal reaction "N" between the surfaces and the coefficient of friction "μ". Its magnitude "F_d" is constant and is equal to "μN". Its direction is opposite to the direction of the velocity. This type of damping is used for their mechanical simplicity. To obtain the equation of motion, cannot use a single free body diagram,

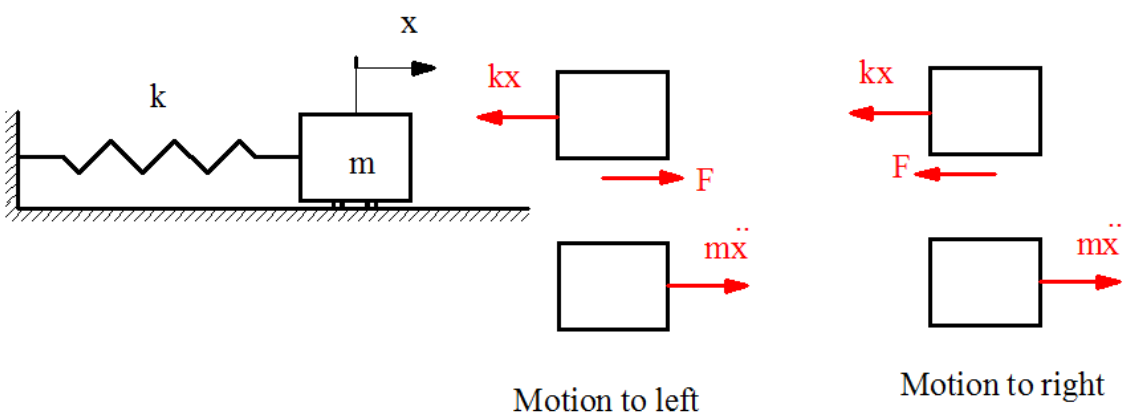

$$m\ddot{x} + kx = -F_d \qquad (motion\ to\ the\ right)$$
$$m\ddot{x} + kx = F_d \qquad (motion\ to\ the\ left)$$

Each equation is valid for only the half cycle of motion indicated.

The solution of the first equation

$$x = A\cos\omega_n t + B\sin\omega_n t - \frac{\mu N}{k}$$

The solution of the second equation

$$x = C\cos\omega_n t + D\sin\omega_n t + \frac{\mu N}{k}$$
$$\dot{x} = -A\omega_n \sin\omega_n t + B\omega_n \cos\omega_n t$$
$$\dot{x} = -C\omega_n \sin\omega_n t + D\omega_n \cos\omega_n t$$

This means that the system vibrates with a frequency which is equal to the natural frequency. The constants "A" , "B" , "C" and "D" are determined from the initial conditions.

Let at "t = 0", $x = x_o$ and $\dot{x} = v_o$

Let x_o, x_1, x_2,… denote the amplitudes of motion at successive half cycles.

The constants are given by

$$C = x_o - d \ , \quad D = 0 \qquad where\ d = \frac{\mu N}{k}$$
$$x = (x_o - d)\cos\omega_n t + d$$

The solution is valid for half the cycle only, i.e. for $0 \le t \le \pi/\omega$, when $t=\pi/\omega$, the mass will be at its extreme left position and its displacement from equilibrium position can be found

$$-x_1 = x\left(t = \frac{\pi}{\omega_n}\right) = (x_o - d)\cos\pi + d$$
$$= -(x_o - 2d)$$

The reduction in magnitude of x in time π/ω (half cycle) is 2d.

In the second half cycle, the mass moves from left to right,

$$x(t = 0) = value\ of\ x\ at\ t = \frac{\pi}{\omega} \text{ in the } 1^{st} \text{ equation}$$
$$= -(x_o - 2d)$$
$$and\ \dot{x} = 0$$
$$Thus\ \ -A = -x_o + 3d, \qquad B = 0$$
$$x = (x_o - 3d)\cos\omega_n t - d$$
$$at\ the\ end\ of\ this\ half\ cycle\ ,$$

$$x_2 = (x\ at\left(t = \frac{\pi}{\omega_n}\right) = (x_o - 4d)$$

$$and\ \dot{x} = 0$$

These become the initial condition of the third half cycle.

- The motion stops when $x_n \leq d$, since the restoring force exerted by the spring force (kx) will then be less than the friction force (μN).
- The number of half cycles (r) that elapse before the motion ceases is given by,

$$x_o - r.d \leq d \qquad that\ is \qquad r \geq \{\frac{x_o - d}{2d}\}$$

The total motion is described by the Figure shown,

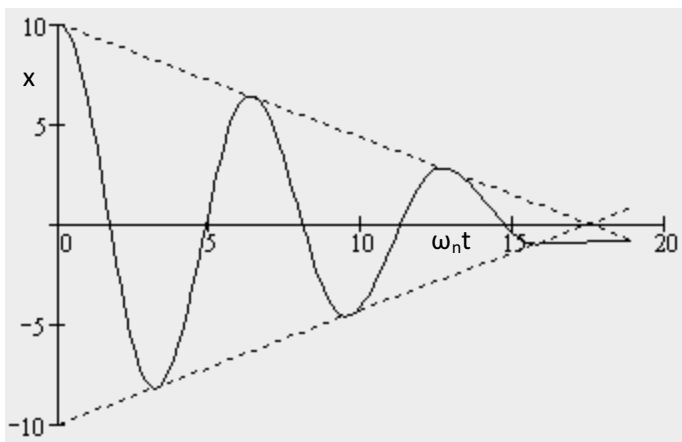

It is clear that the amplitude decreases with a constant rate.

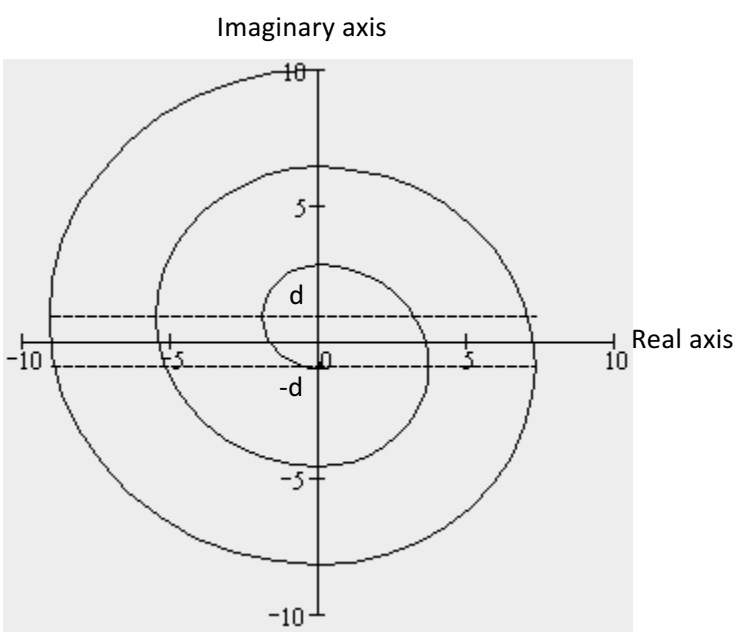

The vector plot is a half a circle with radius "x_{max} – d" and center at "0, d" located at the left side of the imaginary axis. Similarly, the vector plot located at the right side of the imaginary axis is a half a circle with radius "x_{min} + d" and center at "0, -d".

Notes

1- The equation of motion is nonlinear,
2- The natural frequency is not changed with Coulomb damping,
3- The motion is periodic,
4- The system comes to rest after some time, theoretically continuous forever with viscous damping,
5- The amplitude reduces linearly (exponentially in viscous damping),
6- In each successive cycle, the amplitude is reduced by 4d

$$x_m = x_{m-1} - \frac{4\mu N}{k}$$

The slope of the enveloping straight lines shown

$$-\frac{\frac{4\mu N}{k}}{\frac{2\pi}{\omega_n}} = -\left(\frac{2\mu N \omega_n}{\pi k}\right)$$

7- Potential energy,

$$U_n - U_{n+1} = \frac{1}{2}k{x_n}^2 - \frac{1}{2}k{x_{n+1}}^2 \quad = F_d(x_n + x_{n+1})$$

$$\frac{1}{2}k({x_n}^2 - {x_{n+1}}^2) = F_d(x_n + x_{n+1})$$

$$\frac{1}{2}k(x_n - x_{n+1}) = F_d$$

$$(x_n - x_{n+1}) = \frac{2F_d}{k} = 2d \qquad after\ half\ cycle$$

$$for\ each\ cycle = 4d$$

Example: "Pulley subjected to Coulomb damping"

A steel shaft of length 1 m and diameter 50 mm is fixed at one end and carries a pulley of mass moment of inertia 25 Kg.m^2 at the other end. A band brake exerts a constant frictional torque of 400 N.m around the circumference of the pulley. If the pulley is displaced by 6° and released, determine: i- the number of cycles before the pulley comes to rest and ii- the final setting position of the pulley.

Solution:

The number of half cycles that elapse before the angular motion of the pulley ceases is:

$$r \geq \left\{\frac{\theta_o - d}{2d}\right\} \qquad d = \frac{T_d}{k_t}$$

$$\theta_o = 6^o = 0.10472\ rad.$$

$$k_t = \frac{GJ}{l} = 49{,}087.5\ \frac{N.m}{rad}$$

$$T_d = 400\ N.m$$

$$\therefore r = 5.926$$

$$thus\ the\ motion\ ceases\ after\ 6\ half\ cycles.$$

The angular displacement after 6 half cycles

$$\theta = 0.10472 - 6 * 2\left(\frac{400}{49{,}087.5}\right)$$

$$= 0.006935\ \ rad. = 0.39734^o$$

Thus the pulley stops at 0.39734^o from the equilibrium position on the same side of the initial displacement.