MEC 249 – Biomechanics of Solids
Sheet 1 - Solution
Tension and Compression

1. The rigid bar BDE is supported by two links AB and CD. Link AB is made of aluminum (E=70 GPa) and has a cross-sectional area of 500 mm². Link CD is made of steel (E= 200 GPa) and has a cross sectional area of 600 mm2. For the 30-kN force shown, determine the deflection (a) of B, (b) of D, and (c) of E.

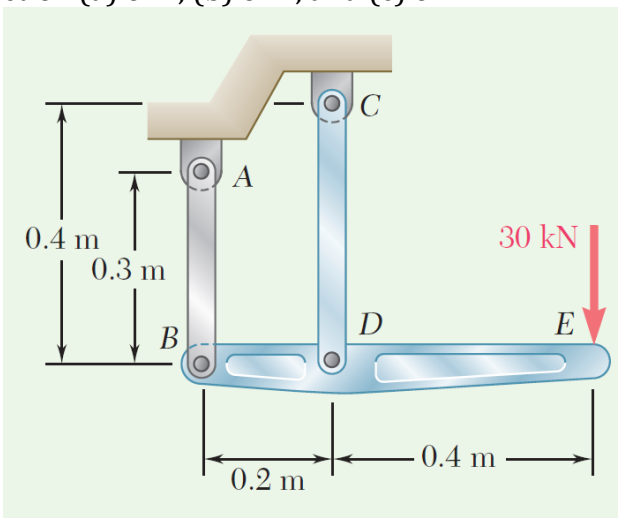

2. A The 4-mm-diameter cable BC is made of a steel with E=200 GPa. Knowing that the maximum stress in the cable must not exceed 190 MPa and that the elongation of the cable must not exceed 6 mm, find the maximum load P that can be applied as shown.

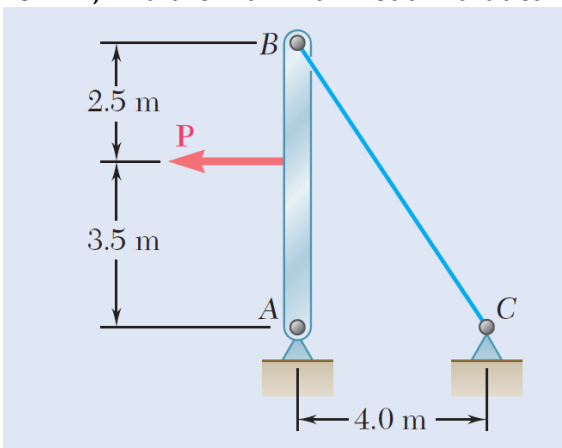

3. The specimen shown has been cut from a 5 mm thick sheet of vinyl (*E*=3.1 GPa) and is subjected to a 1.5 kN tensile load. Determine (*a*) the total deformation of the specimen, (*b*) the deformation of its central portion *BC.*

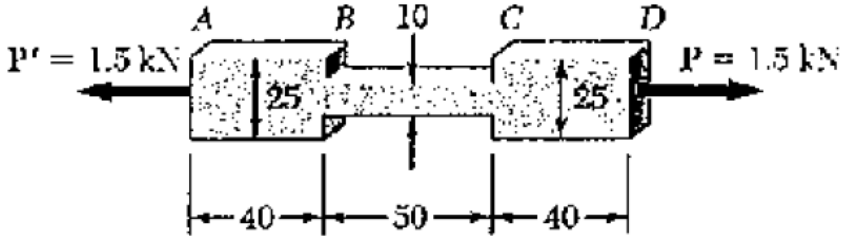

4. For the steel truss (E=29 × 10^6 GPa) and loading shown, determine the deformations of members AB and AD, knowing that their cross-sectional areas are 4 in^2 and 2.8 in^2, respectively.

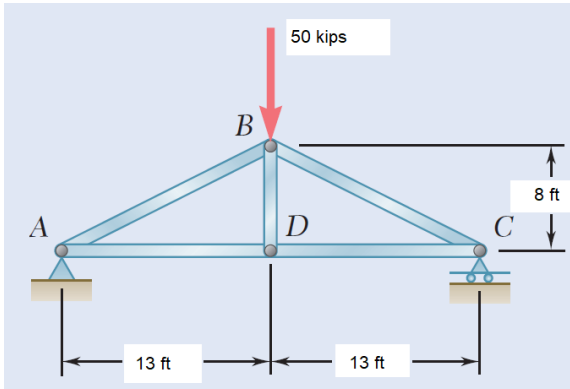

5. Each of the links AB and CD is made of aluminum (E =75 GPa) and has a cross-sectional area of 125 mm^2. Knowing that they support the rigid member BC, determine the deflection of point E.

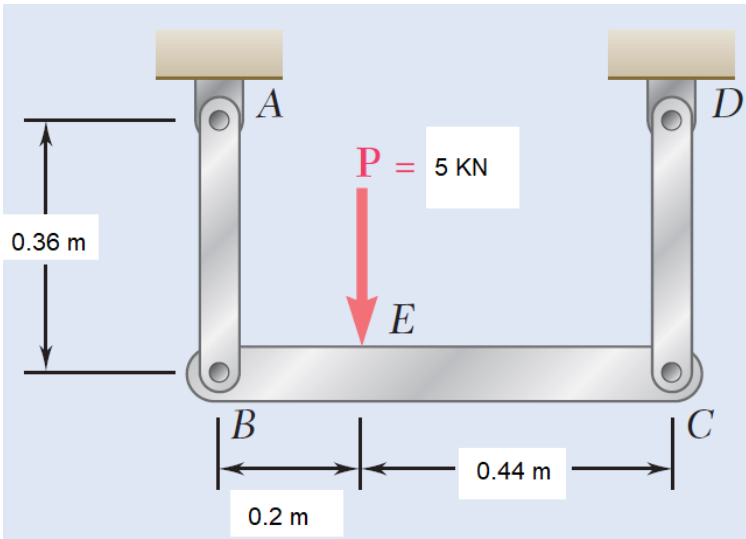

6. In a standard tensile test a steel rod of 20-mm diameter is subjected to a tension force of 30 kN. Knowing that ν = 0.35 and E=70 GPa, determine (a) the elongation of the rod in a 150-mm gage length, (b) the change in diameter of the rod.

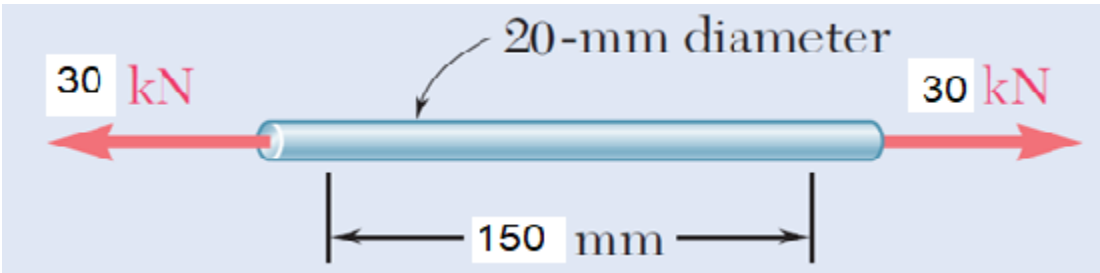

7. A 500-mm-long, 16-mm-diameter rod made of a homogenous isotropic material is observed to increase in length by 300 μmm, and to decrease in diameter by 2.4 μmm when subjected to an axial 12 kN load. Determine the modulus of elasticity and Poisson's ratio of the material.

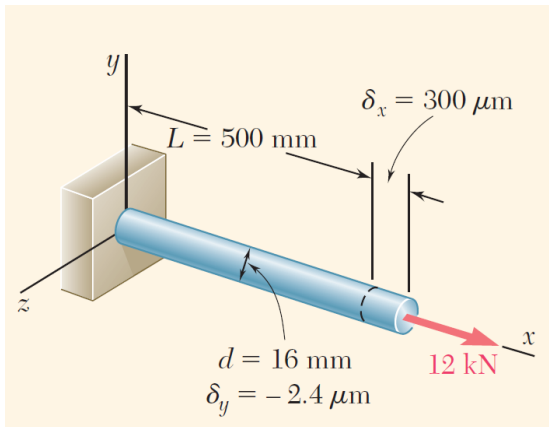

8. Knowing that the hole has a diameter of 9 mm, determine (*a*) the radius r_f of the fillets for which the same maximum stress occurs at the hole *A* and at the fillets, (*b*) the corresponding maximum allowable load **P** if the allowable stress is 100 MPa.

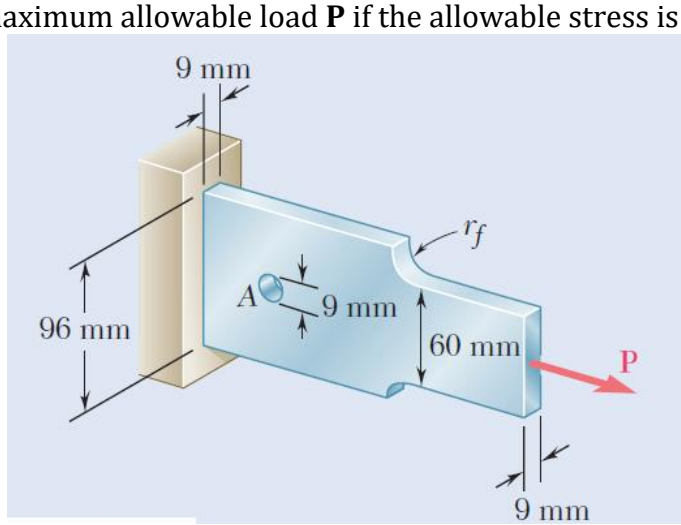

9. For *P* 5 100 kN, determine the minimum plate thickness *t* required if the allowable stress is 125 MPa.