REE 307 - Internal Fluid Flow
Sheet 1
Flow in pipes

1. Water at 20°C flows through a horizontal 1-mm-diameter tube to which are attached two pressure taps a distance 1 m apart. (a) What is the maximum pressure drop allowed if the flow is to be laminar? (b) Assume the manufacturing tolerance on the tube diameter is $D = 1 \pm 0.1$ mm. Given this uncertainty in the tube diameter, what is the maximum pressure drop allowed if it must be assured that the flow is laminar?

2. Three pipes of lengths of 800 m, 500 m and 400 m and of diameters 500, 400 and 300 mm; respectively are connected in series. If this compound pipe is to be replaced by a single pipe of length 1700m, find the diameter of this single pipe for the same discharge.

3. Two reservoirs are connected by a pipe of 200 mm diameter and 3000 m long, the difference in surface is 45 m. Calculate the discharge through the pipes in liters per minute.
   If a loop line of 300 mm diameter and 1200 m long is connected to the last 1200 m of the pipeline. Calculate the increase in discharge due to the additional loop line. Neglect all losses other than those due to friction. Assume f= 0.032.

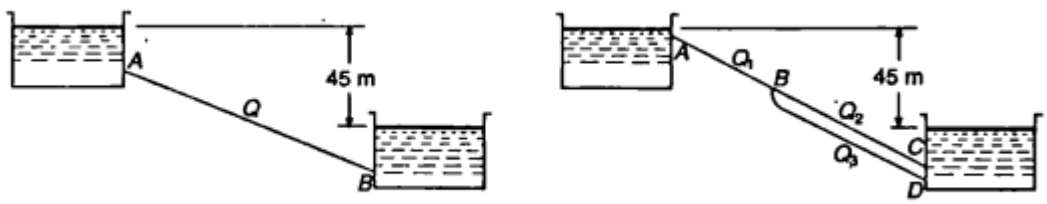

Fig. 1

4. The difference in levels between the catchment reservoir and the service reservoir of a town supply is 180 m and the distance is 64 km, The reservoirs were originally connected by a single pipe to carry 27 x 10^6 liters per day. It was later found necessary to increase the flow by another 9 x 10^6 liters per day. It was decided to lay another pipe of the same diameter alongside the first one and over the last part of the pipe.
   Calculate the diameter of the pipes and the length of the second pip, which is necessary to lay. Take f =0.032.

5. The pressure at section (2) shown in Fig. 2 is not to fall below 60 psi when the flowrate from the tank varies from 0 to 1.0 cfs and the branch line is shut off. Determine the minimum height, h, of the water tank under the assumption that (a) minor losses are negligible, (b) minor losses are not negligible.

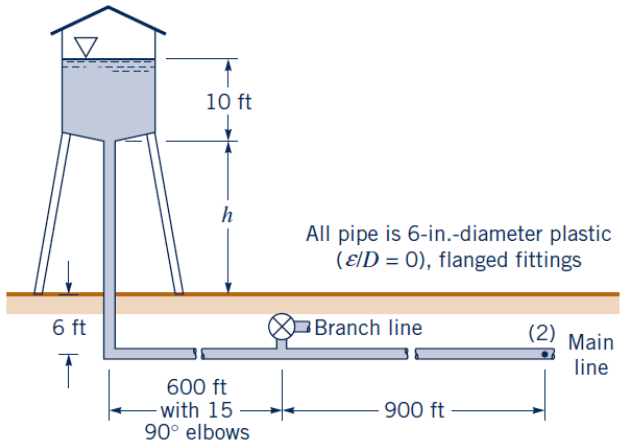

Fig. 2

6. Water at 40° F flows through the coils of the heat exchanger as shown in Fig. 3 at a rate of 0.9 gal/min. Determine the pressure drop between the inlet and outlet of the horizontal device.

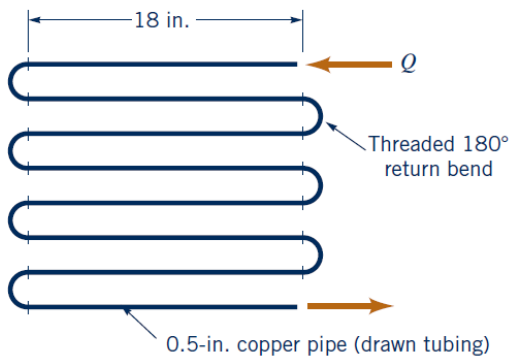

Fig. 3

7. A fan is to produce a constant air speed of 40 m/s throughout the pipe loop shown in Fig. 4. The 3-m-diameter pipes are smooth, and each of the four 90° elbows has a loss coefficient of 0.30. Determine the power that the fan adds to the air.

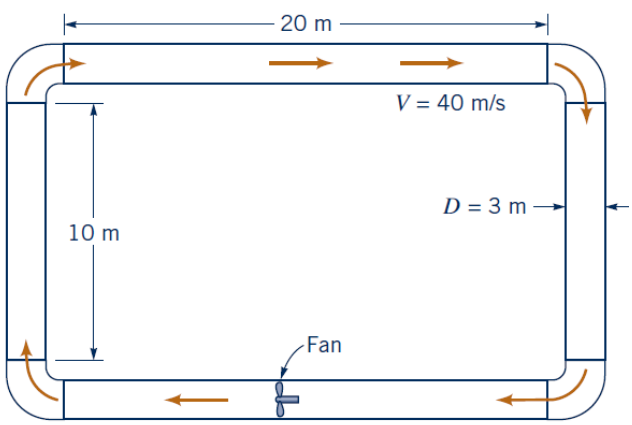

Fig. 4

8. The pump shown in Fig. 5 delivers a head of 250 ft to the water. Determine the power that the pump adds to the water. The difference in elevation of the two ponds is 200 ft.

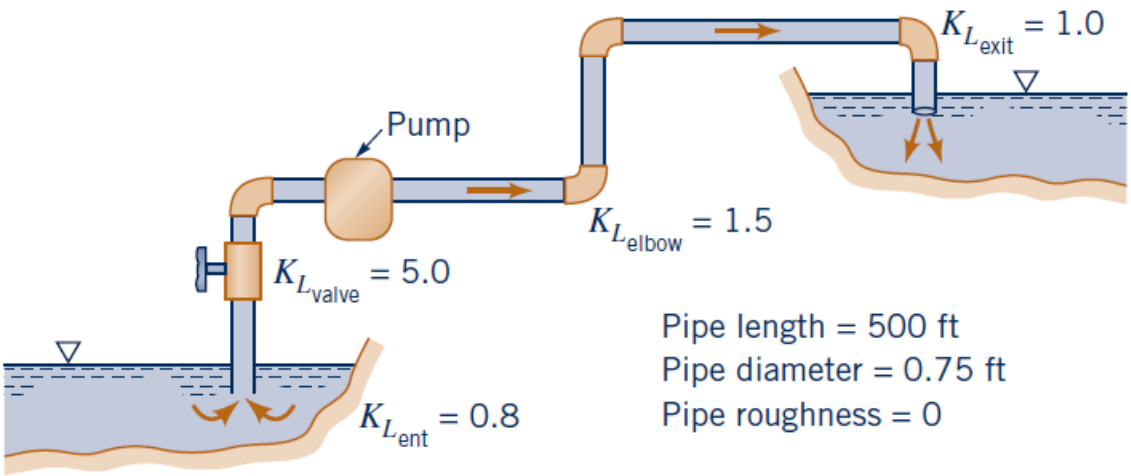

Fig. 5

9. A certain process requires 2.3 cfs of water to be delivered at a pressure of 30 psi. This water comes from a large-diameter supply main in which the pressure remains at 60 psi. If the galvanized iron pipe connecting the two locations is 200 ft long and contains six threaded 90° elbows, determine the pipe diameter. Elevation differences are negligible.

10. Air, assumed incompressible, flows through the two pipes shown in Fig. 6. Determine the flowrate if minor losses are neglected and the friction factor in each pipe is 0.015. Determine the flowrate if the 0.5-in.-diameter pipe were replaced by a 1-in. diameter pipe. Comment on the assumption of incompressibility.

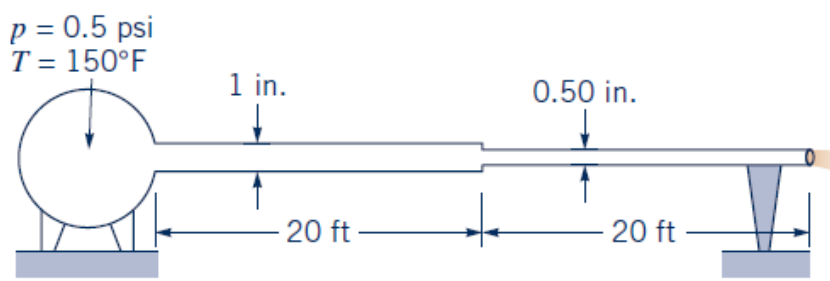

Fig. 6

11. The flowrate between tank A and tank B shown in Fig. 7 is to be increased by 30% (i.e., from Q to 1.30Q) by the addition of a second pipe (indicated by the dotted lines) running from node C to tank B. If the elevation of the free surface in tank A is 25 ft above that in tank B, determine the diameter, D, of this new pipe. Neglect minor losses and assume that the friction factor for each pipe is 0.02.

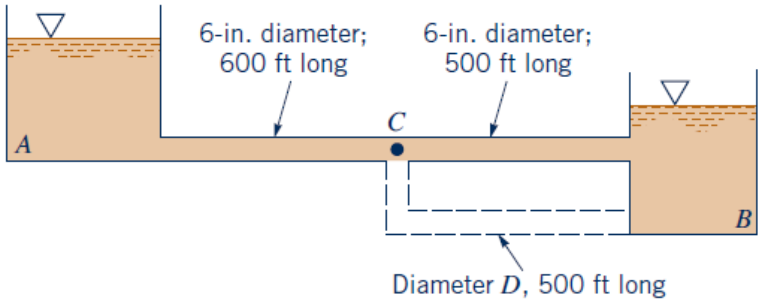

Fig. 7

12. Five oil fields, each producing an output of Q barrels per day, are connected to the 28-in.-diameter "mainline pipe" (A–B–C) by 16-in.-diameter "lateral pipes" as shown in Fig. 8. The friction factor is the same for each of the pipes and elevation effects are negligible. (a) For section A–B determine the ratio of the pressure drop per mile in the mainline pipe to that in the lateral pipes. (b) Repeat the calculations for section B–C.

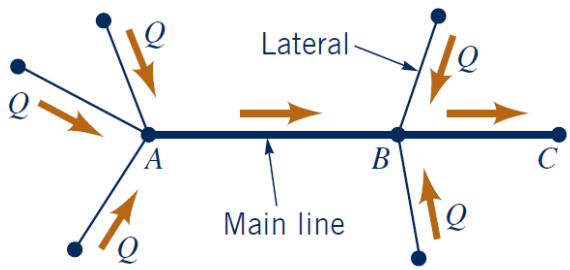

Fig. 8.