EME 304– Mechanical Vibrations
Sheet 1 Solution
Free Undamped Single Degree of Freedom

1. The maximum velocity attained by the mass of a simple harmonic oscillator is 10 cm/s, and the period of oscillation is 2 s. If the mass is released with an initial displacement of 2 cm, find (a) the amplitude, (b) the initial velocity, (c) the maximum acceleration, and (d) the phase angle.

$$x = A\cos(\omega_n t - \phi_0) \quad ,$$
$$\ddot{x} = -\omega_n^2 A \cos(\omega_n t - \phi_0)$$

(a) $\omega_n A = 0.1$ m/sec ; $\tau_n = \frac{2\pi}{\omega_n} = 2$ sec, $\omega_n = 3.1416$ rad/sec

$A = 0.1/\omega_n = 0.03183$ m

(d) $x_0 = x(t=0) = A\cos(-\phi_0) = 0.02$ m

$\cos(-\phi_0) = \frac{0.02}{A} = 0.6283$

$\phi_0 = 51.0724^\circ$

(b) $\dot{x}_0 = \dot{x}(t=0) = -\omega_n A \sin(-\phi_0) = -0.1\sin(-51.0724^\circ)$

$= 0.07779$ m/sec

(c) $\ddot{x}|_{max} = \omega_n^2 A = (3.1416)^2(0.03183) = 0.314151$ m/sec^2

2. Three springs and a mass are attached to a rigid, weightless bar PQ as shown in Fig.1. Find the natural frequency of vibration of the system.

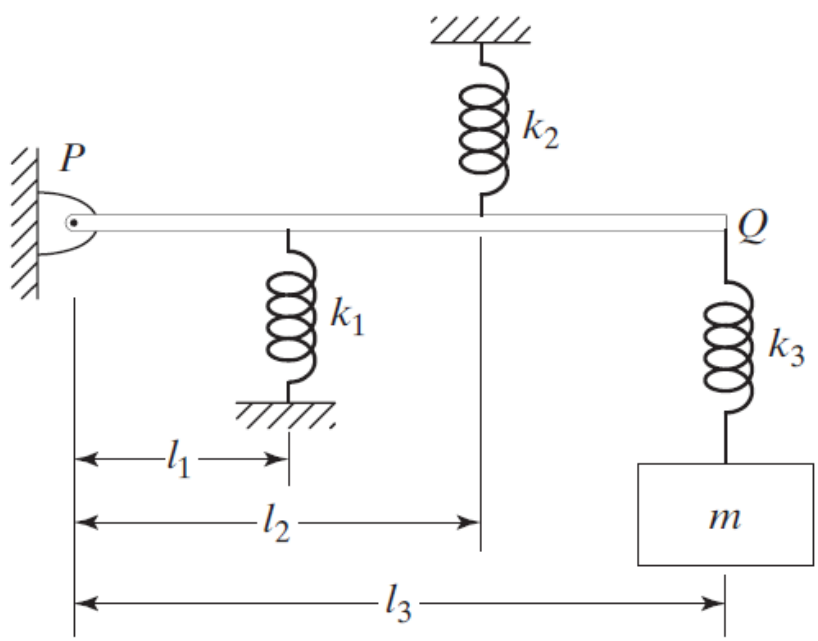

Fig.1.

For small angular rotation of bar PQ about P,

$$\frac{1}{2}(k_{12})_{eq}(\theta l_3)^2 = \frac{1}{2}k_1(\theta l_1)^2 + \frac{1}{2}k_2(\theta l_2)^2$$

i.e., $$(k_{12})_{eq} = (k_1 l_1^2 + k_2 l_2^2)/l_3^2$$

Let k_{eq} = overall spring constant at Q.

$$\frac{1}{k_{eq}} = \frac{1}{(k_{12})_{eq}} + \frac{1}{k_3}$$

$$k_{eq} = \frac{(k_{12})_{eq}\, k_3}{(k_{12})_{eq} + k_3} = \frac{\left\{k_1\left(\frac{l_1}{l_3}\right)^2 + k_2\left(\frac{l_2}{l_3}\right)^2\right\} k_3}{k_1\left(\frac{l_1}{l_3}\right)^2 + k_2\left(\frac{l_2}{l_3}\right)^2 + k_3}$$

$$\omega_n = \sqrt{\frac{k_{eq}}{m}} = \sqrt{\frac{k_1 k_2 l_1^2 + k_2 k_3 l_2^2}{m(k_1 l_1^2 + k_2 l_2^2 + k_3 l_3^2)}}$$

3. An automobile having a mass of 2,000 kg deflects its suspension springs 0.02 m under static conditions. Determine the natural frequency of the automobile in the vertical direction by assuming damping to be negligible.

$m = 2000$ kg , $\delta_{st} = 0.02$ m

$$\omega_n = (g/\delta_{st})^{1/2} = \left(\frac{9.81}{0.02}\right)^{1/2} = 22.1472 \text{ rad/sec}$$

4. Find the natural frequency of vibration of a spring-mass system arranged on an inclined plane, as shown in Fig. 2.

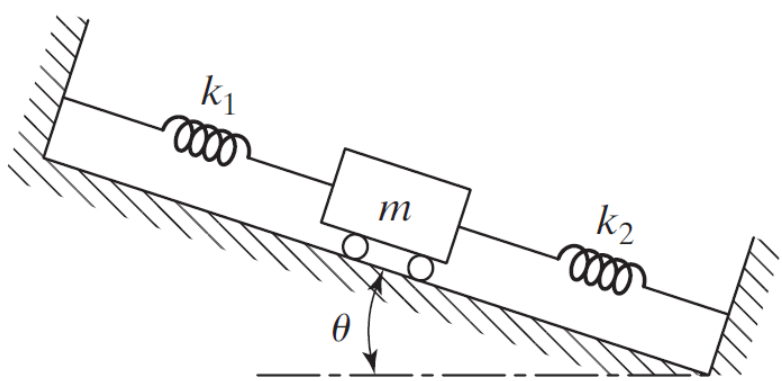

Fig.2.

Let x be measured from the position of mass at which the springs are unstretched.

Equation of motion is

$$m\ddot{x} = -k_1(x+\delta_{st}) - k_2(x+\delta_{st}) + W\sin\theta \quad ---- \quad (E_1)$$

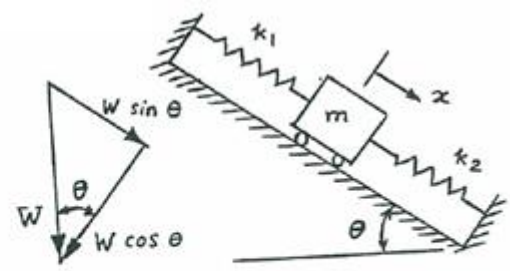

where $\delta_{st}(k_1+k_2) = W\sin\theta$.

Thus Eq. (E_1) becomes $m\ddot{x} + (k_1+k_2)x = 0 \Rightarrow \omega_n = \sqrt{\frac{k_1+k_2}{m}}$.

5. Figure 3 shows a steel traffic sign, of thickness 1/8 in, fixed to a steel post. The post is 72 in. high with a cross section 2 in. * 1/4 in and it can undergo torsional vibration (about the z-axis) or bending vibration (either in the zx-plane or the yz plane). Determine the mode of vibration of the post in a storm during which the wind velocity has a frequency component of 1.25 Hz.

   Hints:

   1. Neglect the weight of the post in finding the natural frequencies of vibration.

   2. Torsional stiffness of a shaft with a rectangular section (see Fig. 2.78(b)) is given by

$$k_t = 5.33\frac{ab^3G}{l}\left[1 - 0.63\frac{b}{a}\left(1 - \frac{b^4}{12a^4}\right)\right]$$

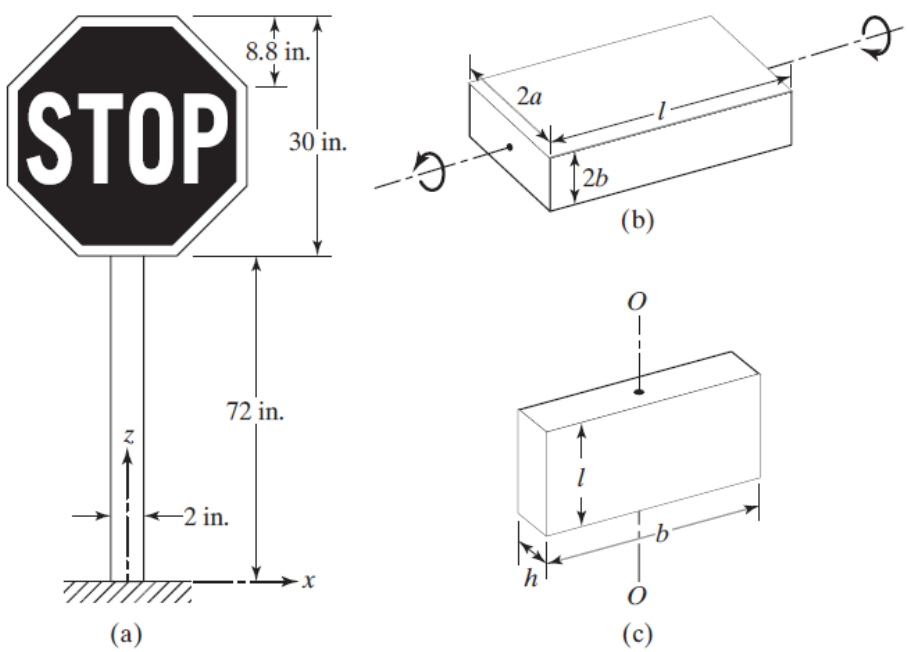

Fig.3.

Sides of the sign:

$$AB = \sqrt{8.8^2 + 8.8^2} = 12.44 \text{ in} \;;\; BC = 30 - 8.8 - 8.8 = 12.4 \text{ in}$$

$$\text{Area} = 30\,(30) - 4\,(\frac{1}{2}\,(8.8)\,(8.8)) = 745.12 \text{ in}^2$$

$$\text{Thickness} = \frac{1}{8} \text{ in} \;;\; \text{Weight density of steel} = 0.283 \text{ lb/in}^3$$

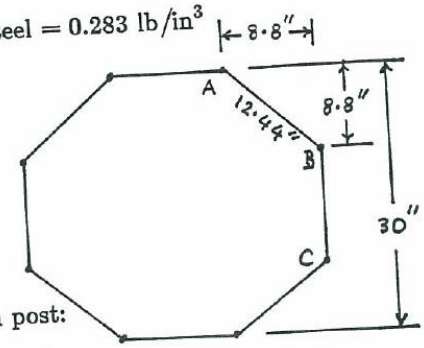

Weight of sign $= (0.283)(\frac{1}{8})(745.12) = 26.64$ lb

Weight of sign post $= (72)\,(2)\,(\frac{1}{4})\,(0.283) = 10.19$ lb

Stiffness of sign post (cantilever beam):

$$k = \frac{3\,E\,I}{\ell^3}$$

Area moments of inertia of the cross section of the sign post:

$$I_{xx} = \frac{1}{12}\,(2)\,(\frac{1}{4})^3 = \frac{1}{384} \text{ in}^4$$

$$I_{yy} = \frac{1}{12}\,(\frac{1}{4})\,(2)^3 = \frac{1}{6} \text{ in}^4$$

Bending stiffnesses of the sign post:

$$k_{xz} = \frac{3\,E\,I_{yy}}{\ell^3} = \frac{3\,(30\,(10^6))(\frac{1}{6})}{72^3} = 40.1877 \text{ lb/in}$$

$$k_{yz} = \frac{3\,E\,I_{xx}}{\ell^3} = \frac{3\,(30\,(10^6))\,(\frac{1}{384})}{72^3} = 0.6279 \text{ lb/in}$$

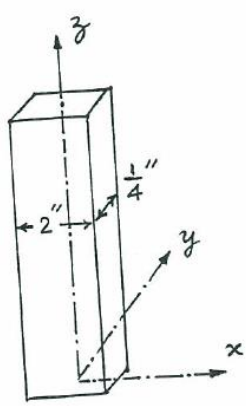

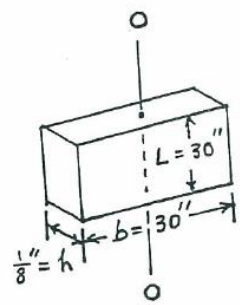

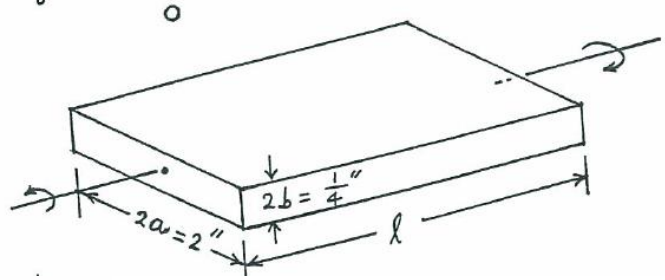

Torsional stiffness of the sign post:

$$k_t = 5.33\ \frac{a\ b^3}{\ell}\ G \left\{ 1 - 0.63\ \frac{b}{a} \left[1 - \frac{b^4}{12\ a^4} \right] \right\}$$

(See Ref: N. H. Cook, *Mechanics of Materials for Design*, McGraw-Hill, New York, 1984, p. 342).

Thus

$$k_t = 5.33 \left\{ \frac{(1)\ (\frac{1}{8})^3}{72} \right\} (11.5\ (10^6)) \left\{ 1 - (0.63)\ (\frac{1}{8}) \left[1 - \frac{(\frac{1}{8})^4}{12\ (1)^4} \right] \right\}$$

$$= 1531.7938 \text{ lb–in/rad}$$

Natural frequency for bending in xz plane:

$$\omega_{xz} = \left\{ \frac{k_{xz}}{m} \right\}^{\frac{1}{2}} = \left\{ \frac{40.1877}{\left(\frac{26.64}{386.4} \right)} \right\}^{\frac{1}{2}} = 24.1434 \text{ rad/sec}$$

Natural frequency for bending in yz plane:

$$\omega_{yz} = \left\{ \frac{k_{yz}}{m} \right\} = \left\{ \frac{0.6279}{\left(\frac{26.64}{386.4} \right)} \right\}^{\frac{1}{2}} = 3.0178 \text{ rad/sec}$$

By approximating the shape of the sign as a square of side 30 in (instead of an octagon), we can find its mass moment of inertia as:

$$I_{oo} = \frac{\gamma\ L}{3}\ (b^3\ h + h^3\ b) = \left(\frac{0.283}{386.4} \right) \left(\frac{30}{3} \right) \left[30^3\ (\frac{1}{8}) + (\frac{1}{8})^3\ (30) \right] = 24.7189$$

Natural torsional frequency:

$$\omega_t = \left\{ \frac{k_t}{I_{oo}} \right\}^{\frac{1}{2}} = \left\{ \frac{1531.7938}{24.7189} \right\}^{\frac{1}{2}} = 7.8720 \text{ rad/sec}$$

Thus the mode of vibration (close to resonance) is torsion in xy plane.

6. Draw the free-body diagram and derive the equation of motion using Newton's second law of motion for each of the systems shown in Figs. 4 and 5.

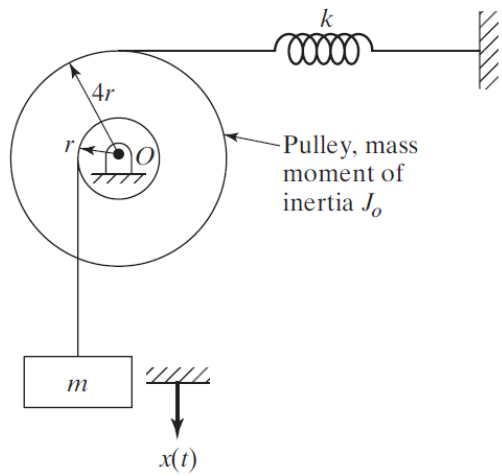

Fig. 4.

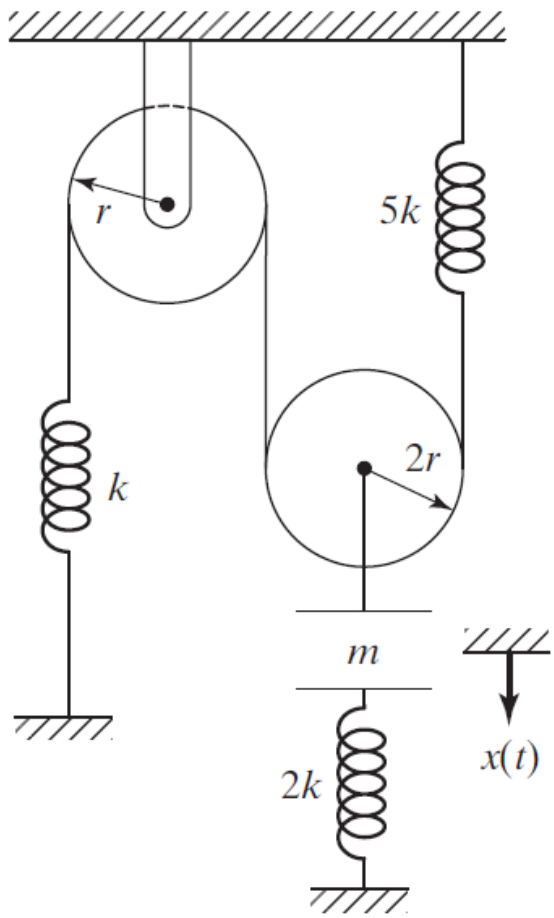

Fig. 5.

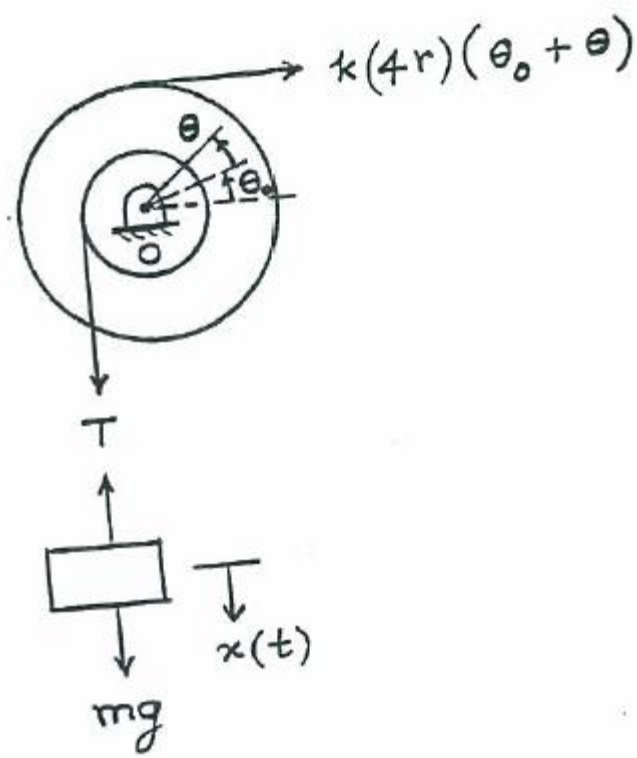

Equation of motion:

$$\text{Mass m:} \quad m\,g - T = m\,\ddot{x} \tag{1}$$

$$\text{Pulley } J_0\text{:} \quad J_0\,\ddot{\theta} = T\,r - k\,4\,r\,(\theta + \theta_0)\,4\,r \tag{2}$$

where θ_0 = angular deflection of the pulley under the weight, mg, given by:

$$m\,g\,r = k\,(4\,r\,\theta_0)\,4\,r \quad \text{or} \quad \theta_0 = \frac{m\,g}{16\,r\,k} \tag{3}$$

Substituting Eqs. (1) and (3) into (2), we obtain

$$J_0\,\ddot{\theta} = (m\,g - m\,\ddot{x})\,r - k\,16\,r^2\,(\theta + \frac{m\,g}{16\,r\,k}) \tag{4}$$

Using $x = r\,\theta$ and $\ddot{x} = r\,\ddot{\theta}$, Eq. (4) becomes

$$(J_0 + m\,r^2)\,\ddot{\theta} + (16\,r^2\,k)\,\theta = 0$$

Consider the springs connected to the pulleys (by rope) to be in series. Then

$$\frac{1}{k_{eq}} = \frac{1}{k} + \frac{1}{5k} \quad \text{or} \quad k_{eq} = \frac{5}{6}\,k$$

Let the displacement of mass m be x. Then the extension of the rope (springs connected to the pulleys) = 2 x. From the free body diagram, the equation of motion of mass m:

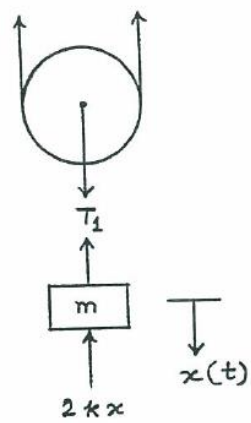

$$m\ddot{x} + 2\,k\,x + k_{eq}\,(2\,x) = 0$$

$$\text{or} \quad m\ddot{x} + \frac{11}{3}\,k\,x = 0$$

7. Determine the displacement x velocity $\dot{x}$ and acceleration $\ddot{x}$ of a spring-mass system with ω_n= 10 rad/s for the initial conditions x_o= 0.05 m and $\dot{x}_o$=1 m/s. Plot and from to 5 s.

Data: $\omega_n = 10$ rad/s, $x_o = 0.05$ m, $\dot{x}_o = 1$ m/s

Response of undamped system:

$$x(t) = x_o \cos \omega_n t + \frac{\dot{x}_o}{\omega_n} \sin \omega_n t$$

$$= 0.05 \cos 10t + \left(\frac{1}{10}\right) \sin 10t$$

$$\therefore x(t) = 0.05 \cos 10t + 0.1 \sin 10t \quad \text{m} \qquad (E.1)$$

$$\dot{x}(t) = -0.5 \sin 10t + \cos 10t \quad \text{m/s} \qquad (E.2)$$

$$\ddot{x}(t) = -5 \cos 10t - 10 \sin 10t \quad \text{m/s}^2 \qquad (E.3)$$

Plotting of Eqs. (E.1) to (E.3):

```
% Ex2_52.m
for i = 1: 1001
   t(i) = (i-1)*5/1000;
   x(i) = 0.05 * cos(10*t(i)) + 0.1*sin(10*t(i));
   dx(i) = -0.5*sin(10*t(i)) + cos(10*t(i));
   ddx(i) = -5*cos(10*t(i)) - 10*sin(10*t(i));
end
plot(t, x);
hold on;
plot(t, dx, '--');
plot(t, ddx, ':');
xlabel('t');
ylabel('x(t), dx(t), ddx(t)');
title('Solid line: x(t)  Dashed line: dx(t)  Dotted line: ddx(t)');
```

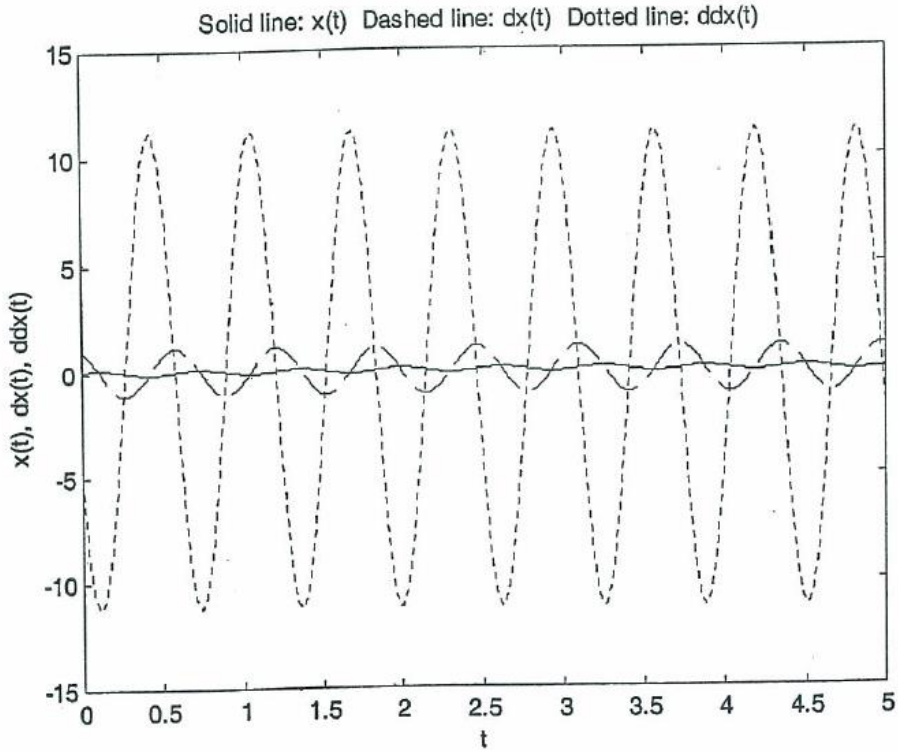

8. A simple pendulum shown in Fig. 6 is set into oscillation from its rest position by giving it an angular velocity of 1 rad/s. It is found to oscillate with an amplitude of 0.5 rad. Find the natural frequency and length of the pendulum.

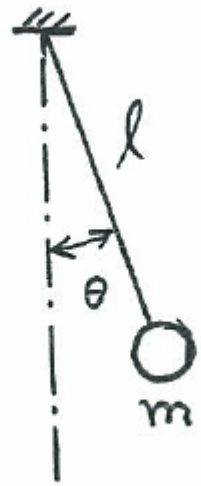

Fig. 6.

For free vibration, apply Newton's second law of motion:

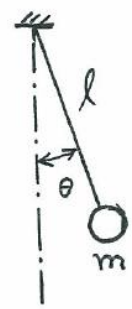

$$m\ell\ddot{\theta} + mg\sin\theta = 0 \qquad (E.1)$$

For small angular displacements, Eq. (E.1) reduces to

$$m\ell\ddot{\theta} + mg\theta = 0 \qquad (E.2)$$

or

$$\ddot{\theta} + \omega_n^2\theta = 0 \qquad (E.3)$$

where

$$\omega_n = \sqrt{\frac{g}{\ell}} \qquad (E.4)$$

Solution of Eq. (E.3) is:

$$\theta(t) = \theta_0\cos\omega_n t + \frac{\dot{\theta}_0}{\omega_n}\sin\omega_n t \qquad (E.5)$$

where θ_0 and $\dot{\theta}_0$ denote the angular displacement and angular velocity at $t=0$. The amplitude of motion is given by

9. A mass m is attached at the end of a bar of negligible mass and is made to vibrate in three different configurations, as indicated in Fig. 7. Find the configuration corresponding to the highest natural frequency

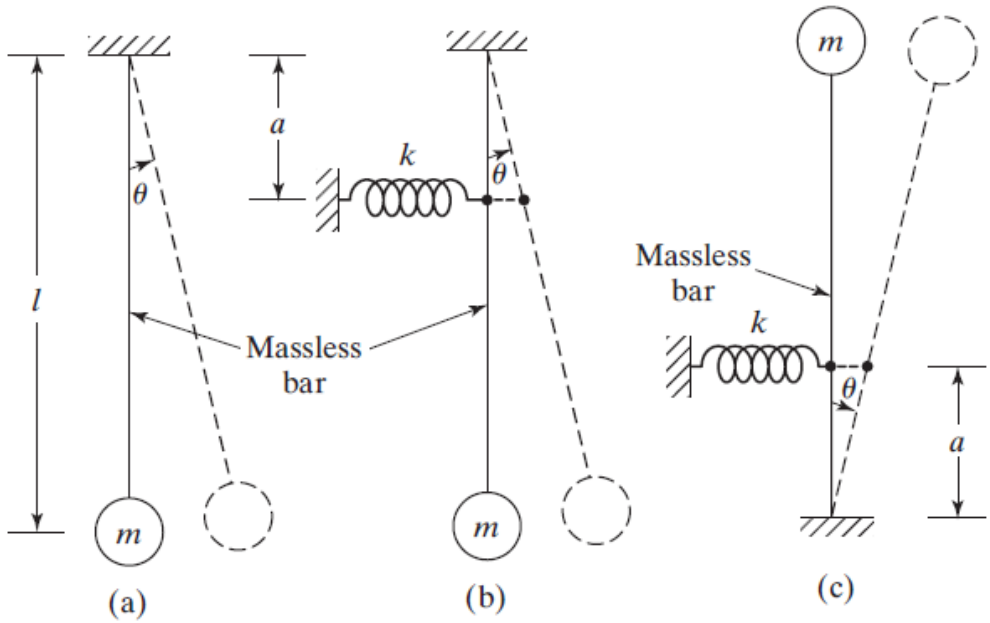

Fig. 7.

(a) $\omega_n = \sqrt{\frac{g}{l}}$

(b) $ml^2\ddot{\theta} + ka^2 \sin\theta + mgl \sin\theta = 0$; $ml^2\ddot{\theta} + (ka^2 + mgl)\,\theta = 0$

$\omega_n = \sqrt{\frac{ka^2 + mgl}{ml^2}}$

(c) $ml^2\ddot{\theta} + ka^2 \sin\theta - mgl \sin\theta = 0$; $ml^2\ddot{\theta} + (ka^2 - mgl)\,\theta = 0$

$\omega_n = \sqrt{\frac{ka^2 - mgl}{ml^2}}$

configuration (b) has the highest natural frequency.

10. A uniform slender rod of mass m and length l is hinged at point A and is attached to four linear springs and one torsional spring, as shown in Fig. 8. Find the natural frequency of the system if k = 2000 N/m, kt and l = 5 m.

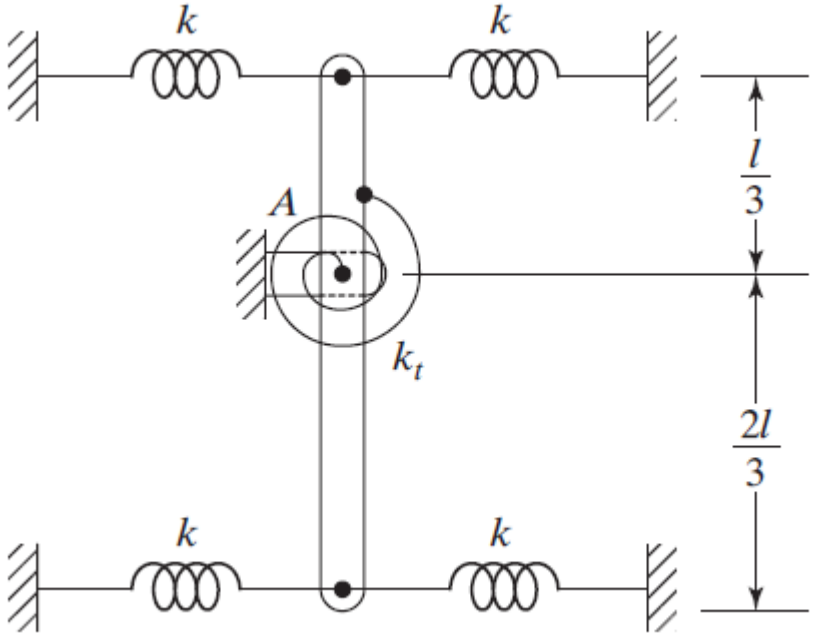

Fig. 8.

Equation of motion

$$J_A \ddot{\theta} = -W\, d\theta - 2k\left(\frac{l}{3}\theta\right)\frac{l}{3} - 2k\left(\frac{2l}{3}\theta\right)\frac{2l}{3} - k_t\,\theta$$

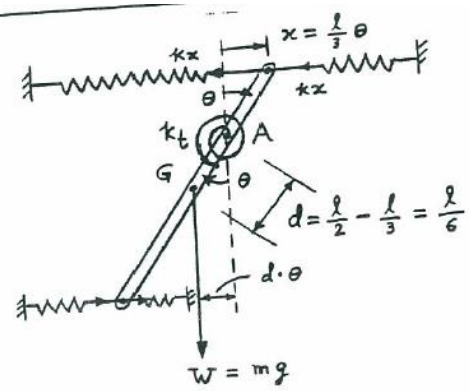

where

$$J_A = J_G + m d^2 = \frac{1}{12} m l^2 + m \frac{l^2}{36} = \frac{1}{9} m l^2$$

$$\therefore \frac{m l^2}{9}\ddot{\theta} + \left(mgd + 2k\frac{l^2}{9} + \frac{8k l^2}{9} + k_t\right)\theta = 0$$

$$\omega_n = \sqrt{\frac{\left(mgd + \frac{2}{9}k l^2 + \frac{8}{9}k l^2 + k_t\right)9}{m l^2}} = \sqrt{\frac{9mgd + 10k l^2 + 9k_t}{m l^2}}$$

11. Derive the equation of motion of the system shown in Fig. 9.

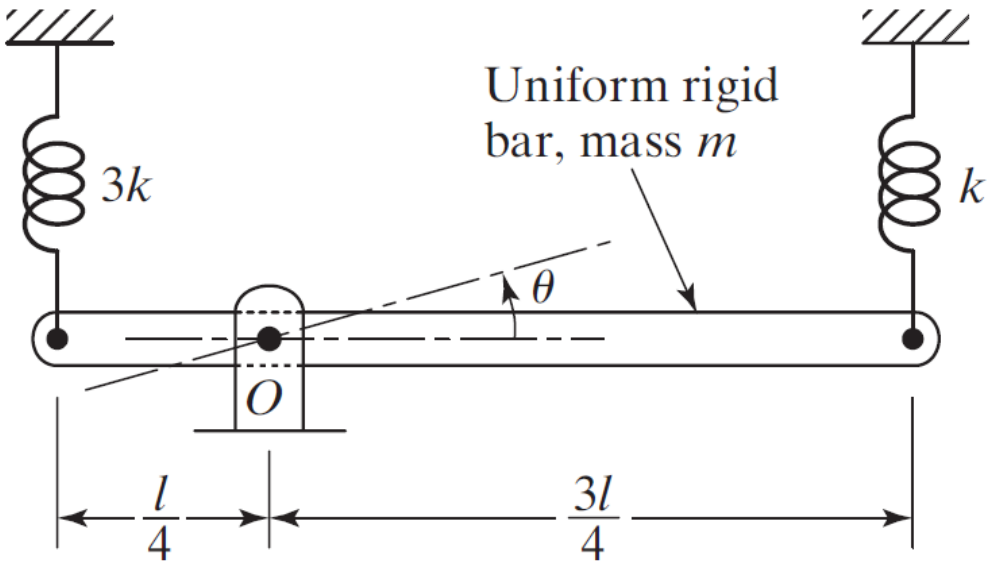

Fig. 9.

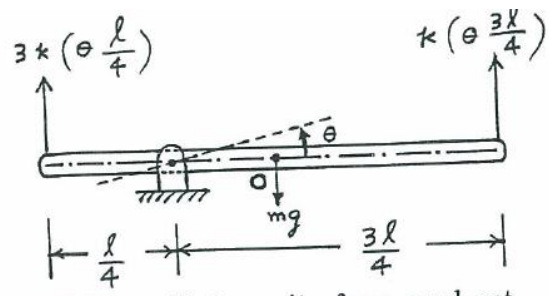

Let θ be measured from static equilibrium position so that gravity force need not be considered.

(a) Newton's second law of motion:

$$J_0 \ddot{\theta} = -3\,k\,(\theta \frac{\ell}{4})\,\frac{\ell}{4} - k\,(\theta \frac{3\,\ell}{4})\,(\frac{3\,\ell}{4}) \quad \text{or} \quad J_0 \ddot{\theta} + \frac{3}{4}\,k\,\ell^2\,\theta = 0$$

(b) D'Alembert's principle:

$$M(t) - J_0 \ddot{\theta} = 0 \quad \text{or} \quad -3\,k\,(\theta \frac{\ell}{4})\,(\frac{\ell}{4}) - k\,(\theta \frac{3\,\ell}{4})\,(\frac{3\,\ell}{4}) - J_0 \ddot{\theta} = 0$$

$$\text{or} \quad J_0 \ddot{\theta} + \frac{3}{4}\,k\,\ell^2\,\theta = 0$$