Machine Design Course for Communication / Electrical Department
Sheet 1

Problem 1

Determine the maximum Moment in the steel I section shown in Figure 1. The flanges are 6 mm wide and the web is 3 mm thick.

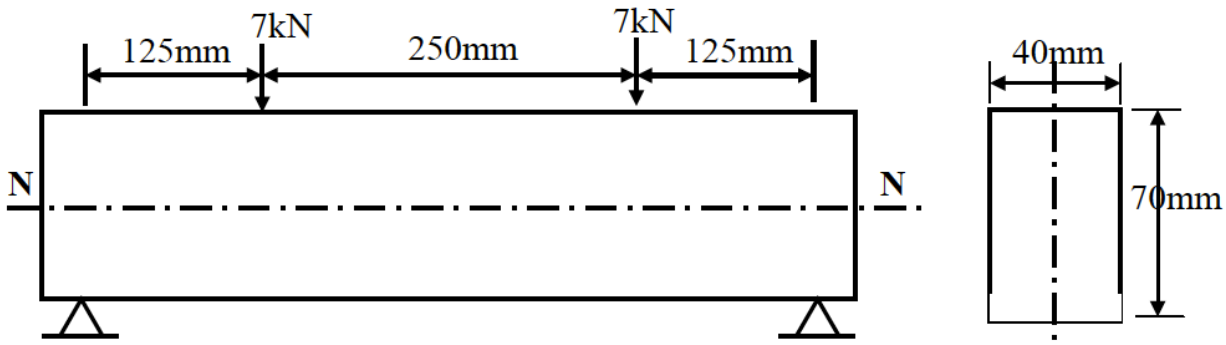

Figure 1.

Problem 2

A ship's propeller shaft transmits 8 MW at 5 rev/s. The shaft has the inner diameter of 150 mm. Calculate the maximum permissible external diameter if the shearing stress in the shaft is limited to 150 MPa.

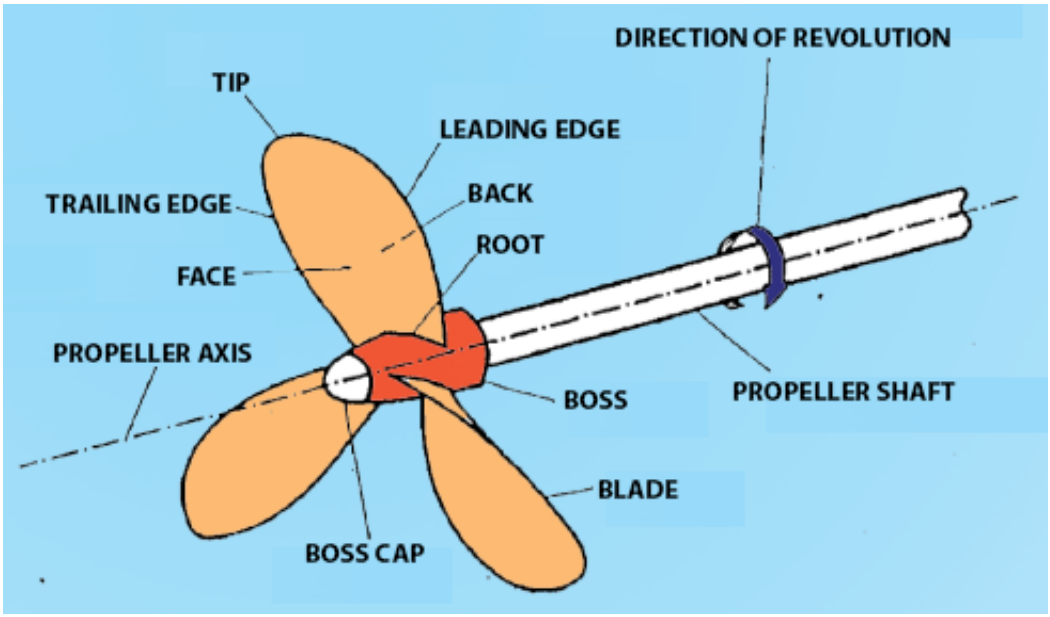

Problem 3

The press frame shown in the Figure is planned to be made of cast iron having ultimate strength of 240 MPa in tension and 900 MPa in compression. Based upon stress calculations made at section A-A, would the press frame be more likely to fail in tension or compression?

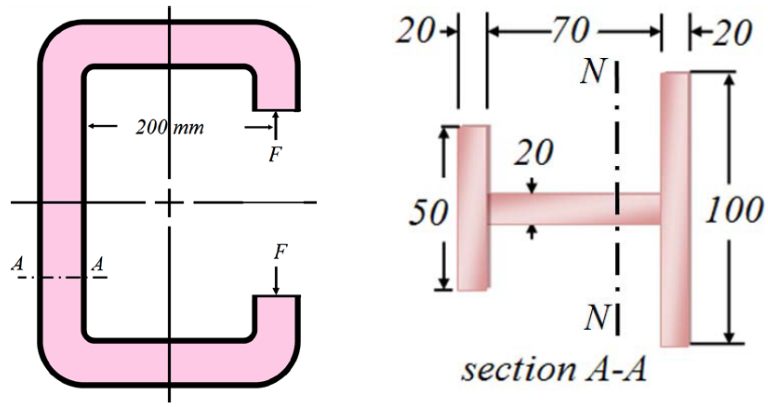

Problem 4

A steel column is 3m long and 0.4 m diameter. It carries a load of 50 MN. Given that the modulus of elasticity is 200 GPa, calculate the compressive stress and strain. Also determine how much the column is compressed.

Problem 5

A composite shaft AC is made by connecting a 20-mm diameter solid steel shaft AB to a 40-mm diameter solid aluminum shaft BC at flange B. The shear modulus of the steel is 72 GPa and the shear modulus of the aluminum is 24 GPa. A concentrated torque of 500 N.m is applied to the flange in the direction indicated.

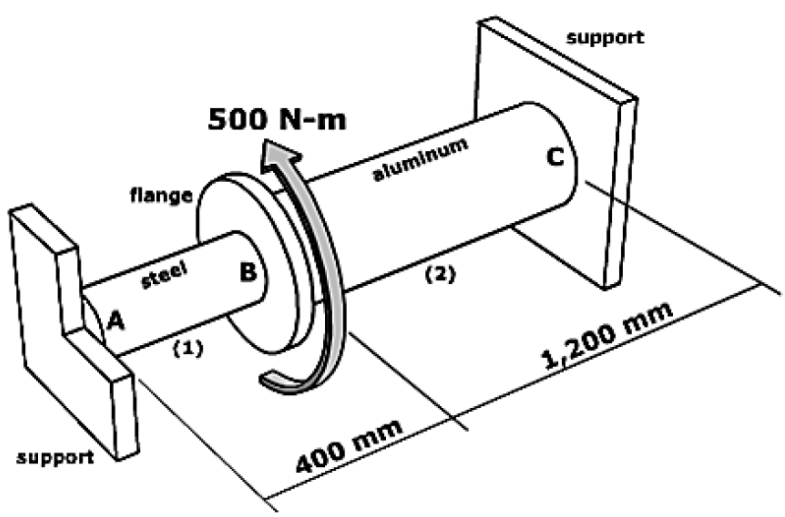

Problem 6

For the key length of 50 mm and allowable shear stress of 65 MPa; find the applied force W.

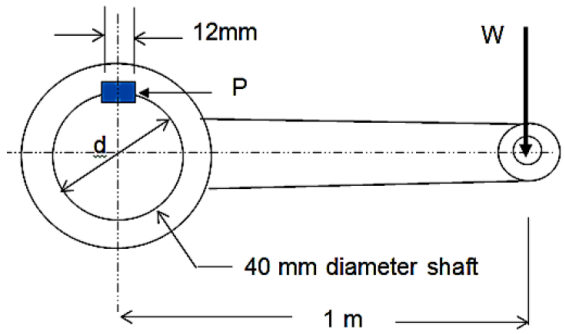

Problem 7

Two lengths of pipe are joined with a bolted-flange connection consisting of six bolts. The diameter of the bolt circle (see sketch) is 150 mm. A torque of T = 12 kN.m is applied to the pipes as shown. Assume the allowable shear stress for the bolts is 200 MPa; determine the minimum diameter required for the bolts in the connection. (Disregard friction between the two flanges.)

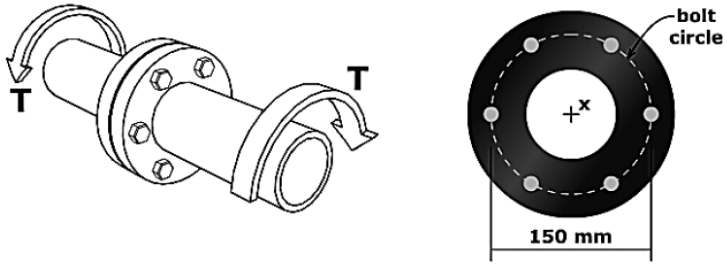

Problem 8

The pipe shown has an outside diameter of 160 mm and an inside diameter of 144 mm. A concentrated load of 3,000 N acts at the free end K. Determine the normal and shear stresses produced at point H on the surface of the pipe. Show these stresses on a stress element.

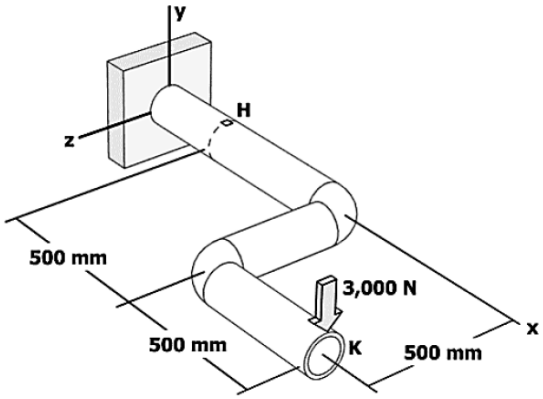

Problem 9

A vertical force P of magnitude 240 N is applied to the crank at point A. Knowing that the shaft BDE has a diameter of 18 mm. Determine the normal and shear stresses acting at point H located at the top of the shaft, 50 mm to the right of support D.

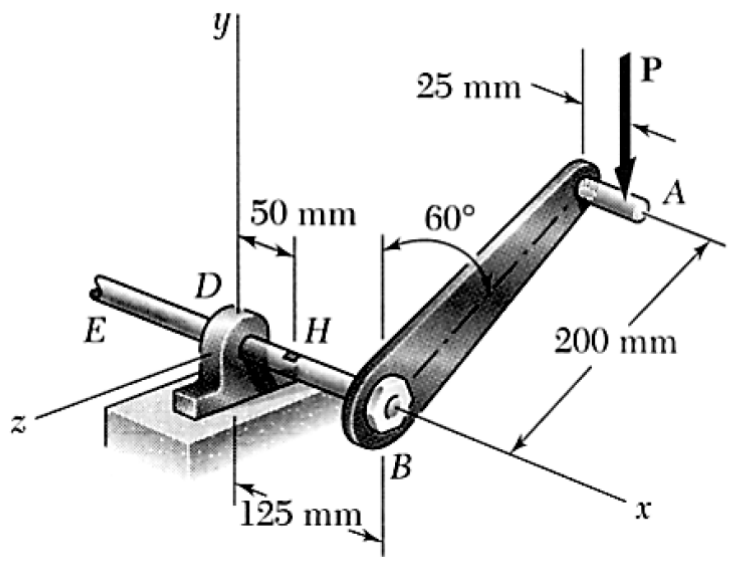

Problem 10

Determine the normal and shear stresses at points A and B of the solid shaft shown below. The vertical force F = 2 KN , the horizontal force P = 5 kN , the moment T = 4 N.m.