Matlab Sheet 5

Functions

1. The output of the MATLAB `atan2` function is in radians. Write a function called `atan2d` that produces an output in degrees.
2. Write a function that accepts temperature in degrees Fahrenheit (°F) and computes the corresponding value in degrees Celsius (°C). The relation between the two is

$$T\ °\mathrm{C} = \frac{5}{9}(T\ °\mathrm{F} - 32)$$

   Test your function at 32, 50 and 100.
3. An object thrown vertically with a speed v_0 reaches a height h at time t, where

$$h = v_0 t - \frac{1}{2} g t^2$$

   Write and test a function that computes the time t required to reach a specified height h, for a given value of v_0. The function's inputs should be h, v_0, and g. Test your function for the case where h = 100 m, v_0 = 50 m/s, and g = 9.81 m/s^2. Interpret both answers.

Writing and reading from command window and files

4. When a belt is wrapped around a cylinder, the relation between the belt forces on each side of the cylinder is

$$F_1 = F_2 e^{\mu\beta}$$

where β is the angle of wrap of the belt in radian and μ is the friction coefficient. Write a script file that first prompts a user to specify β, μ, and F_2 and then computes the force F_1. Test your program with the values β = 130°, μ = 0.3, and F_2 = 100 N. (Hint: Be careful with β!)

5. The intrinsic electrical conductivity σ of a semiconductor can be approximated by:

$$\sigma = e^{\left(C - \frac{E_g}{2kT}\right)}$$

Where σ is measured in $(\Omega - m)^{-1}$, E_g is the band gap energy, k is Boltzmann's constant (8.26×10^{-5} ev/K), and T is temperature in kelvins. For Germanium, C = 13.83 and E_g = 0.67 ev. Write a program in a script file that calculates the intrinsic electrical conductivity for Germanium for various temperatures. The values of the temperature should be read from an xls spreadsheet using the xlsread command. The output should be presented as a table where the first column is the temperature and the second column is the intrinsic electrical conductivity. Use the following values for temperature: 400, 435, 475, 500, 520, and 545 K.

6. The graph of the function $f(x) = ax^3 + bx^2 + cx + d$ passes through the points (–2.6, –68), (0.5, 5.7), (1.5, 4.9), and (3.5, 88). Determine the constants a, b, c, and d. (Write a system of four equations with four unknowns, and use MATLAB to solve the equations.)

7. The pressure drop in Pa for a fluid flowing in a pipe with a sudden increase in diameter is given by:

$$\Delta p = \frac{1}{2}\left[1 - \left(\frac{d}{D}\right)^2\right]^2 \rho v^2$$

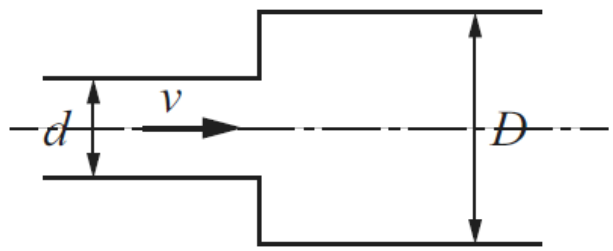

where ρ is the density of the fluid, v, the velocity of the flow, and d and D are defined in the figure. Write a program in a script file that calculates the pressure drop Δp. When the script file is executed it request the user to input the density in kg/m^3, the velocity in m/s, and values of the non-dimensional ratio as a vector. The program displays the inputted values of and v followed by a table with the values of in the first column and the corresponding values of Δp in the second column.

Execute the program assuming flow of gasoline (ρ = 737 kg/m^3) at v = 5 m/s and the following ratios of diameters d/D = 0.9, 0.8, 0.7, 0.6, 0.5, 0.4, 0.2.

8. A truss is a structure made of members joined at their ends. For the truss shown in the figure

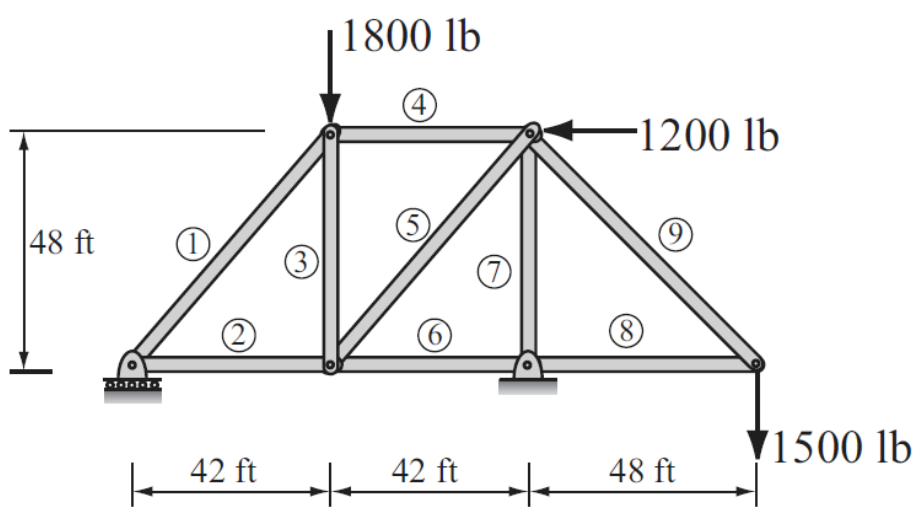

the forces in the nine members are determined by solving the following system of nine equations:

$$F_2 + \cos(48.81°)F_1 = 0$$
$$F_6 + \cos(48.81°)F_5 - F_2 = 0$$
$$\sin(48.81°)\,F_5 + F_3 = 0$$
$$-\cos(48.81°)F_1 + F_4 = 0$$
$$-\sin(48.81°)\,F_1 + F_3 = 1800$$
$$-F_4 - \cos(48.81°)F_5 = 1200$$
$$-F_7 - \sin(48.81°)F_5 - \sin(45°)F_9 = 0$$
$$\sin(45°)F_9 = 1500$$
$$-\cos(45°)F_9 + F_8 = 0$$

Write the equations in matrix form and use MATLAB to determine the forces in the members. A positive force means tensile force and a negative force means compressive force. Display the results in a table where the first column displays the member number and the second column displays the corresponding force.

Interpolation

9. It Interpolation is useful when one or more data points are missing. This situation often occurs with environmental measurements, such as temperature, because of the difficulty of making measurements around the clock. The following table of temperature versus time data is missing readings at 5 and 9 hours. Use linear interpolation with MATLAB to estimate the temperature at those times.

	Day				
Hour	**Mon**	**Tues**	**Wed**	**Thurs**	**Fri**
1	17	15	12	16	16
2	13	?	8	11	12
3	14	14	9	?	15
4	17	15	14	15	19
5	23	18	17	20	24

10. Computer-controlled machines are used to cut and to form metal and other materials when manufacturing products. These machines often use cubic splines to specify the path to be cut or the contour of the part to be shaped. The following coordinates specify the shape of a certain car's front fender. Fit a series of cubic splines to the coordinates, and plot the splines along with the coordinate points.

x (ft)	0	0.25	0.75	1.25	1.5	1.75	1.875	2	2.125	2.25
y (ft)	1.2	1.18	1.1	1	0.92	0.8	0.7	0.55	0.35	0

11. A The following data are the measured temperature T of water owing from a hot water faucet after it is turned on at time t = 0.

t (sec)	T (°F)	t (sec)	T (°F)
0	72.5	6	109.3
1	78.1	7	110.2
2	86.4	8	110.5
3	92.3	9	109.9
4	110.6	10	110.2
5	111.5		

a. Plot the data, connecting them first with straight lines and then with a cubic spline.
b. Estimate the temperature values at the following times, using linear interpolation and then cubic spline interpolation: t = 0.6, 2.5, 4.7, 8.9.
c. Use both the linear and cubic spline interpolations to estimate the time it will take for the temperature to equal the following values: T = 75, 85, 90, 105.