Buckling of Columns

Buckling of Columns

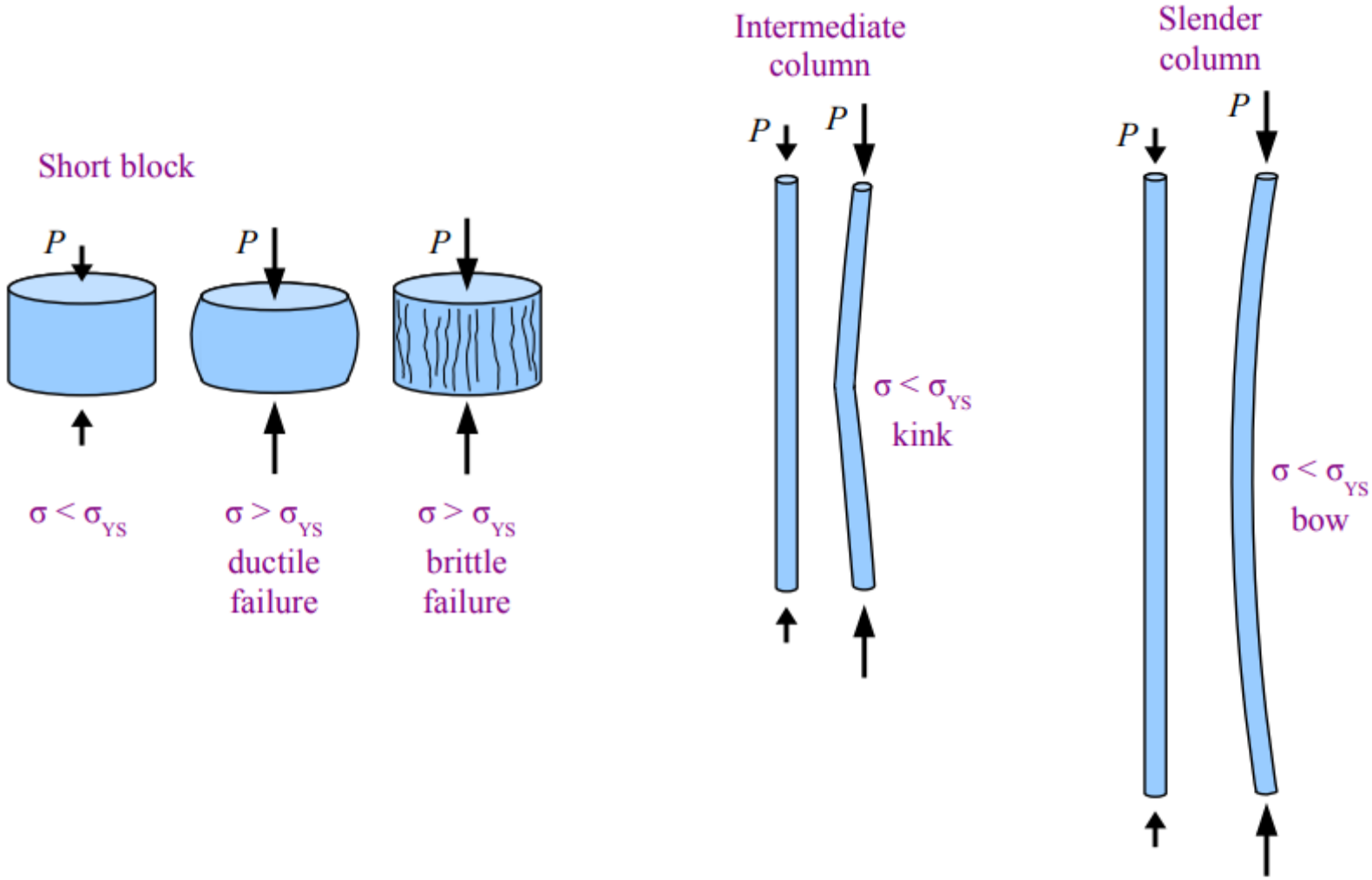

Critical Load

Some member may be subjected to compressive loadings, and if these members are long enough to cause the member to deflect laterally or sideway. To be specific, long slender members subjected to an axial compressive force are called ***columns***, and the lateral deflection that occurs is called ***buckling***. Quite often the buckling of a column can lead to sudden and dramatic failure of a structure or mechanism, and as a result, special attention must be given to the design of columns so that they can safely support their intended loadings without buckling. The maximum axial load that a column can support when it is on the verge of buckling is called ***critical load***, $\boldsymbol{P_{cr}}$. An additional loading will cause the column to buckle and therefore deflect laterally as shown in the attached figure.

Ideal Column with Pin Supports

$$P_{cr} = \frac{\pi^2 EI}{L^2} \qquad (1)$$

Where

P_{cr} Critical or maximum axial load on the column just before being to buckle

E Modulus of elasticity of the material.

I Least moment of inertia for the column's cross-sectional area

L Unsupported length of the column.

Euler's equation assumes the wire is perfectly straight, the loads are applied in perfect alignment with the axis of the column, there are no materials

Ideal Column with Pin Supports

$$P_{cr} = \frac{\pi^2 EI}{L^2} \qquad (1)$$

Euler's equation assumes the wire is perfectly straight, the loads are applied in perfect alignment with the axis of the column, there are no materials defects in the steel, the cross-section is perfect and uniform along the length of the wire, there are no scratches on the wire's surface, and the ends can rotate freely with no friction

Ideal Column with Pin Supports

Radius of Gyration (r_G)

The radius of gyration is used for analyzing columns, which are tall, thin structures loaded in compression. Columns fail by buckling at stresses below the expected yield strength of the material. The greater the radius of gyration, the more resistant a column is to buckling failure.

$$r_G = \sqrt{\frac{I}{A}}$$

I: Second moment of area

A: Area

Ideal Column with Pin Supports

For purpose of design, Eq. (1) can also be written in a more useful form by expressing $I = Ar^2$, where A is the cross-sectional area and r is the ***radius of gyration*** of the cross-sectional area. Thus,

$$\sigma_{cr} = \frac{\pi^2 E}{\left(\frac{L}{r}\right)^2} \qquad (2)$$

Where

σ_{cr} Critical stress, which is an average normal stress in the column just before the column buckles. This stress is an elastic stress and therefore $\sigma_{cr} \leq \sigma_Y$

The geometric ratio L / r in Eq. (2) is known the ***slenderness ratio***. It is a measure of the column's flexibility, it serves to classify columns as long, intermediate, or short.

Ideal Column with Pin Supports

Example

The A-36 steel W 200 x 46 member shown in the attached figure is to be used as a pin-connected column. Determine the largest axial load it can support before it either begins to buckle or the steel to yield.

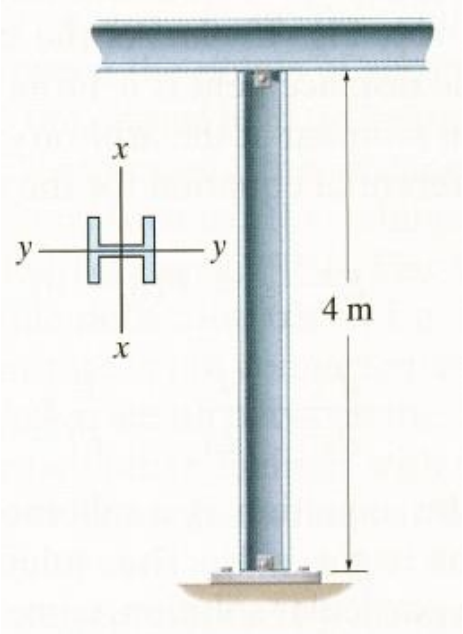

From the table in Appendix B, the column's cross-sectional area and moments of inertia are $\boldsymbol{A}$ **=5890 mm²**, $\boldsymbol{I_x}$ **= 45.5 (10⁶) mm⁴** and $\boldsymbol{I_y}$ **= 15.3 (10⁶) mm⁴**. By inspection, buckling will occur about the ***y-y*** axis. Applying Eq.(1)

$$P_{cr} = \frac{\pi^2 EI}{L^2} = \frac{\pi^2 (200\,000)\left[15.3\left(10^6\right)\right]}{\left[4(1000)\right]^2} = 1887.6\left(10^3\right)\text{ N}$$

Ideal Column with Pin Supports

$$\sigma_{cr} = \frac{P_{cr}}{A} = \frac{1887.6\left(10^3\right)}{5890} = 320.5 \text{ MPa}$$

Since the stress exceeds the yield stress (250 MPa), the load P is determined from simple compression

$$\sigma_c = \frac{P}{A} = \frac{P}{5890} = 250 \qquad \Rightarrow \qquad P = 1.47\left(10^6\right)\text{N}$$

In actual practice, a factor of safety would be placed on this loading.

Columns Having Various Types of Supports

The Euler load (P_{cr}) was derived for a column that is pin connected or free to rotate at its ends. Oftentimes, however, columns may be supported in some other way.

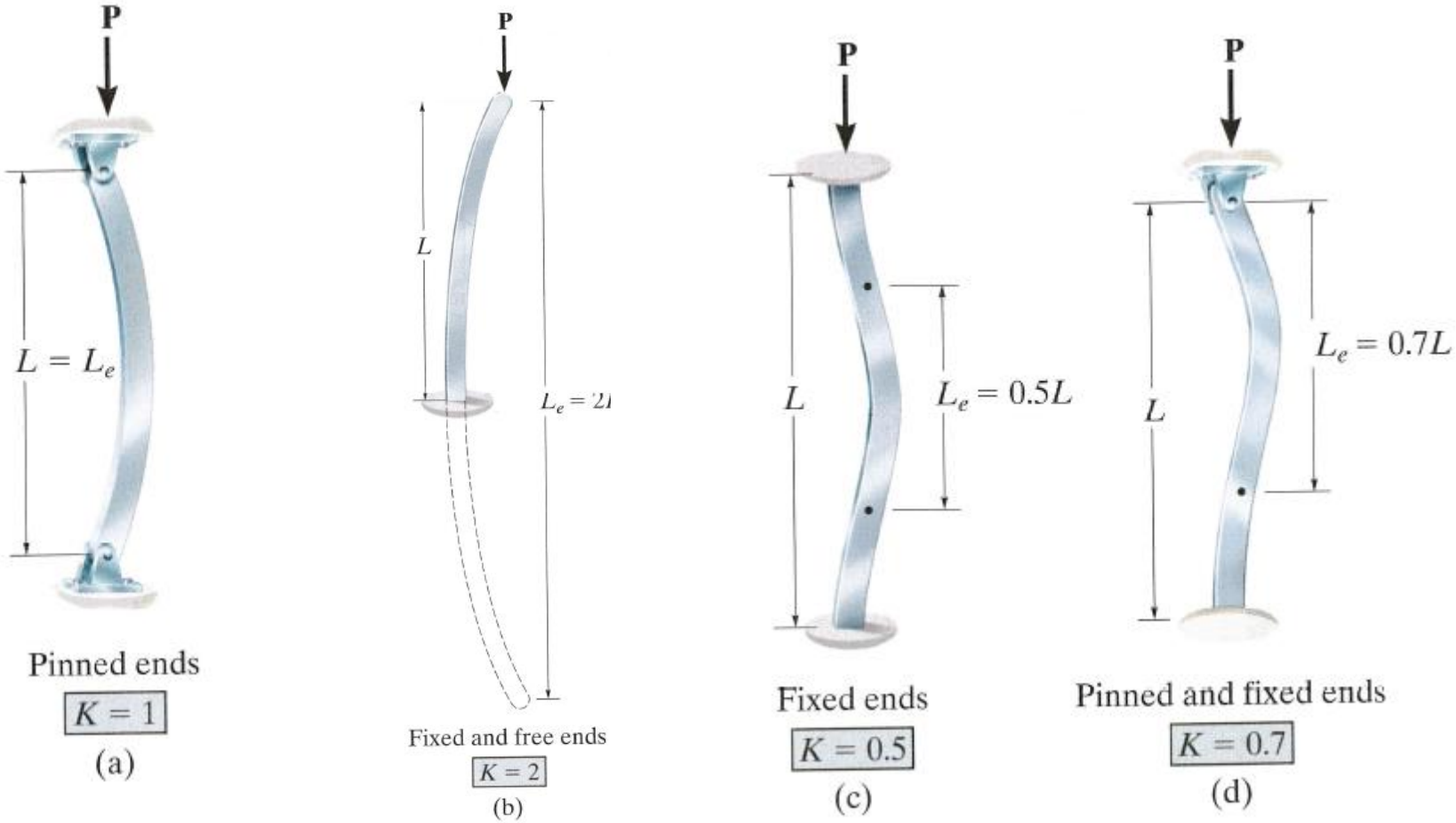

Columns Having Various Types of Supports

$$P_{cr} = \frac{\pi^2 EI}{(KL)^2} \qquad (3)$$

$$\sigma_{cr} = \frac{\pi^2 E}{\left(\frac{KL}{r}\right)^2} \qquad (4)$$

Example

The Aluminum column is braced at its top by cables so as to prevent movement at the top along the x - axis as shown in the attached figure. If it is assumed to be fixed at its base, determine the largest allowable load $\boldsymbol{P}$ that can be applied. Use a factor of safety for buckling of F.S. = 3. Take $\boldsymbol{E}_{\mathbf{al}}$ = 70 GPa and $\boldsymbol{\sigma}_{\mathbf{Y}}$= 215 MPa, $\boldsymbol{A}$ = 7.5 $(10^{-3})m^2$, $\boldsymbol{I}_{\mathbf{x}}$ = 61.3 (10^{-6}) m^4, $\boldsymbol{I}_{\mathbf{y}}$ = 23.2 (10^{-6}) m^4.

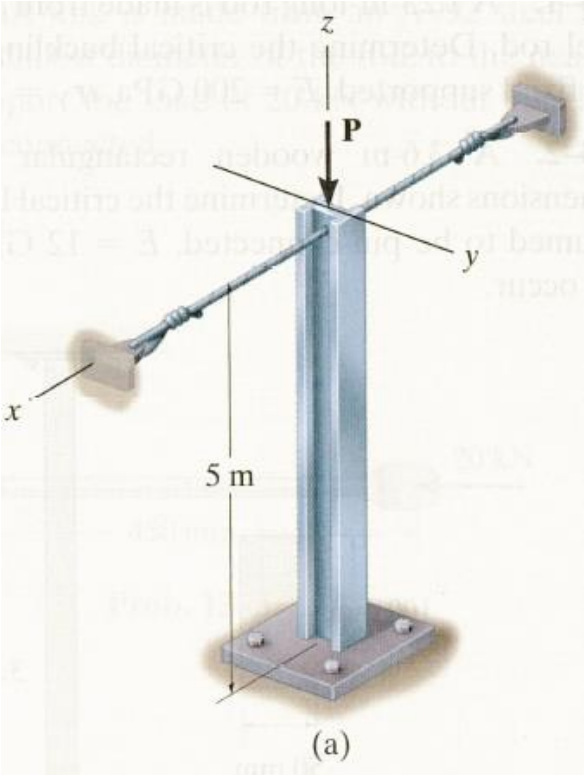

Columns Having Various Types of Supports

Buckling about the x and y axes is shown in Figs. (b) and (c), respectively. Using Fig. (a), for $x - x$ axis buckling , $\boldsymbol{K} = 2$. Also, for $y - y$ axis buckling, $\boldsymbol{K} = 0.7$

Applying Eq (3), the critical loads for each case are

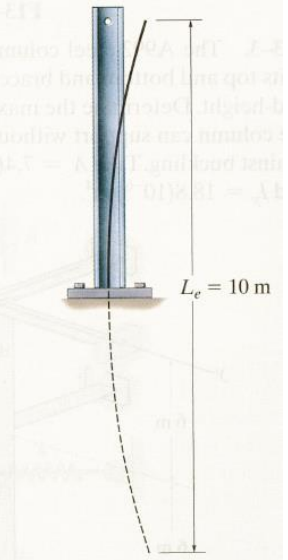

x–x axis buckling

(b)

$$(P_{cr})_x = \frac{\pi^2 EI}{(KL)_x^2} = \frac{\pi^2 (70\,000)[61.3(10^6)]}{(2*5000)^2} = 424000 \text{ N}$$

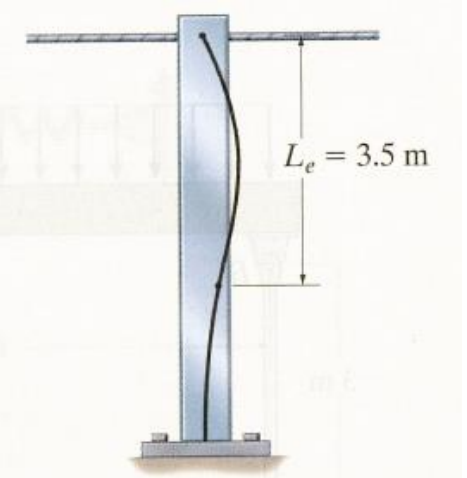

y–y axis buckling

(c)

$$(P_{cr})_y = \frac{\pi^2 EI}{(KL)_y^2} = \frac{\pi^2 (70\,000)[23.2(10^6)]}{(0.7*5000)^2} = 1.31(10^6) \text{ N}$$

Columns Having Various Types of Supports

By comparison, as ***P*** is increased the column will buckle about the ***x*** – ***x*** axis. The allowable load is therefore

$$P_{allow} = \frac{P_{cr}}{F.S} = \frac{424000}{3} = 141000 \text{ N}$$

Since

$$\sigma_{cr} = \frac{P_{cr}}{A} = \frac{424\left(10^3\right)}{7.5\left(10^3\right)} = 56.5 \text{ MPa} < 215 \text{ MPa}$$

Euler's equation can be applied.